Item description/product images

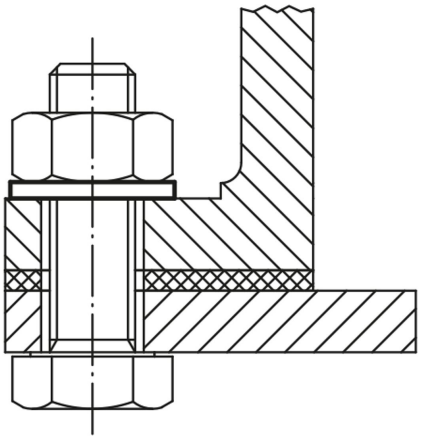

Description

Material:
Steel, stainless steel A2 or stainless steel A4.

Version:
Steel, bright.
Stainless steel A2, bright.
Stainless steel A4, bright.

Drawings

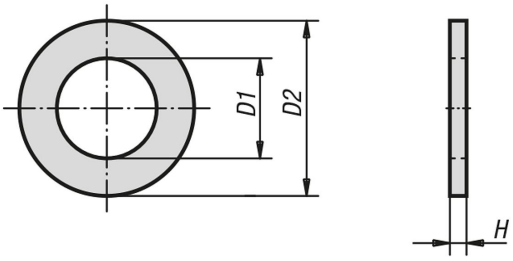

Overview of items

Order No.	Main material	Grade	for screws	D1	D2	H
07300-03	0.0048	-	M3	3,2	7	0,5
07300-04	0.0048	-	M4	4,3	9	0,8
07300-05	0.0048	-	M5	5,3	10	1
07300-06	0.0048	-	M6	6,4	12	1,6
07300-08	0.0048	-	M8	8,4	16	1,6
07300-10	0.0048	-	M10	10,5	20	2
07300-12	0.0048	-	M12	13	24	2,5
07300-14	0.0048	-	M14	15	28	2,5
07300-16	0.0048	-	M16	17	30	3
07300-20	0.0048	-	M20	21	37	3
07300-24	0.0048	-	M24	25	44	4
07300-30	0.0048	-	M30	31	56	4
07300-36	0.0048	-	M36	37	66	5
07300-103	additional carriage for concentricity gauge 32506	70	M3	3,2	7	0,5
07300-104	additional carriage for concentricity gauge 32506	70	M4	4,3	9	0,8
07300-105	additional carriage for concentricity gauge 32506	70	M5	5,3	10	1

Overview of items

Order No.	Main material	Grade	for screws	D1	D2	H
07300-106	additional carriage for concentricity gauge 32506	70	M6	6,4	12	1,6
07300-108	additional carriage for concentricity gauge 32506	70	M8	8,4	16	1,6
07300-110	additional carriage for concentricity gauge 32506	70	M10	10,5	20	2
07300-112	additional carriage for concentricity gauge 32506	70	M12	13	24	2,5
07300-114	additional carriage for concentricity gauge 32506	70	M14	15	28	2,5
07300-116	additional carriage for concentricity gauge 32506	70	M16	17	30	3
07300-120	additional carriage for concentricity gauge 32506	70	M20	21	37	3
07300-124	additional carriage for concentricity gauge 32506	70	M24	25	44	4
07300-130	additional carriage for concentricity gauge 32506	70	M30	31	56	4
07300-136	additional carriage for concentricity gauge 32506	70	M36	37	66	5
07300-603	Clamping width 50 mm, width approx. 20 mm	70	M3	3,2	7	0,5
07300-604	Clamping width 50 mm, width approx. 20 mm	70	M4	4,3	9	0,8
07300-605	Clamping width 50 mm, width approx. 20 mm	70	M5	5,3	10	1
07300-606	Clamping width 50 mm, width approx. 20 mm	70	M6	6,4	12	1,6
07300-608	Clamping width 50 mm, width approx. 20 mm	70	M8	8,4	16	1,6
07300-610	Clamping width 50 mm, width approx. 20 mm	70	M10	10,5	20	2
07300-612	Clamping width 50 mm, width approx. 20 mm	70	M12	13	24	2,5
07300-614	Clamping width 50 mm, width approx. 20 mm	70	M14	15	28	2,5
07300-616	Clamping width 50 mm, width approx. 20 mm	70	M16	17	30	3
07300-620	Clamping width 50 mm, width approx. 20 mm	70	M20	21	37	3
07300-624	Clamping width 50 mm, width approx. 20 mm	70	M24	25	44	4
07300-630	Clamping width 50 mm, width approx. 20 mm	70	M30	31	56	4
07300-636	Clamping width 50 mm, width approx. 20 mm	70	M36	37	66	5