Item description/product images

Description

Material:
Steel.

Version:
Case-hardened and black oxidised.

Note:
This is a quick-action side clamp where workpieces are clamped by rotating a cam wheel which exerts pressure on the swivel jaw, simultaneously producing a positive down force.
Using the stop screw and centring bush (see diagram), the side clamp can be mounted and positioned on a modular grid system.

The versions 04516-006010, 04516-006015, 04516-006030 and 04516-006035 have 2 round carbide inserts.

Clamping force:
04516-006... = 3800 N
04516-010... = 7200 N

Drawings

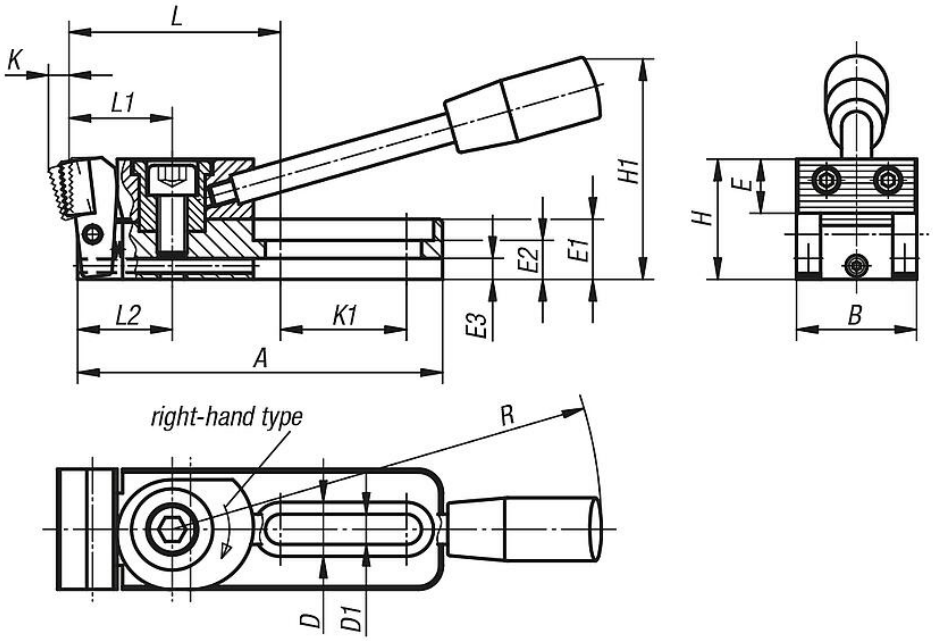

Form D
POM jaw
serrated

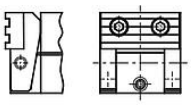

Overview of items

Order No.	Form	Version 1	A	B	D	D1	E	E1	E2	E3	H	H1	K	K1	L	L1	L2	R	F=Retaining force N
04516-006020	D	0,32	78	25	12	6,2	11	12	8	4	25	45	4	26	46,5	22	20	110	3800
04516-010020	D	0,32	121,5	40	18	10,2	18	20	13	7	40	74	6	42	70,5	35	31,5	143	7200
04516-006040	D	0,29	78	25	12	6,2	11	12	8	4	25	45	4	26	46,5	22	20	110	3800
04516-010040	D	0,29	121,5	40	18	10,2	18	20	13	7	40	74	6	42	70,5	35	31,5	143	7200

Overview of items