Item description/product images

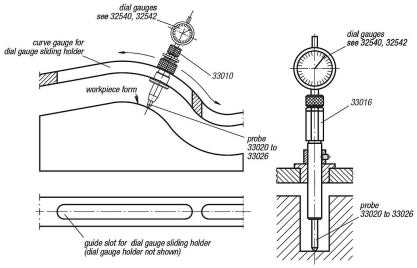

Description

Material:
Carbon steel.

Version:
Black oxidised.
Collet and body tempered.

Note:
Dial gauge and probe are not included.
Dial gauges see 32540 and 32542.
Probes see 33020 up to 33026.

Drawings

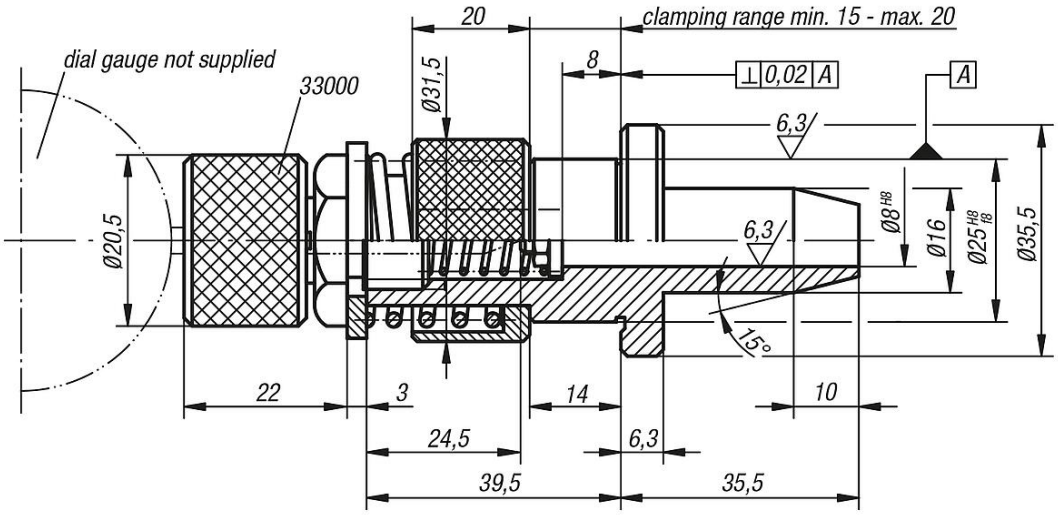

Overview of items

Order No.	Supplied for the probe pin
33010-08025	1 washer 5.3 x 14 x 11 hex nut M51 spring