Item description/product images

Description

Material:
Electrically conductive polyoxymethylene (POM).

Version:
Flexible hose, black.
Accessories, black.

Note:
Flexible hose for extracting swarf, smoke, lubricant mist, steam, gases and other media; can be connected to a central extraction system or an industrial vacuum cleaner. It can be extended and shortened as needed. Free hanging lengths of up to 100 cm are possible without the need for support; 360° loops can be formed with a radius of 150 mm. Precise adjustment, vibration resistant, position reliability. Combinable with nozzles and accessories as required.

Resistant to: acids below 65 °C, alcohols, aromatic solvents, petrol, grease, hydrocarbons, oil, saline solutions.

Not resistant to: chlorine, acetone, chlorinated solvents, strong bases, ethyl acetate, water above 65 °C.

Antistatic and electric properties:
specific surface resistivity: 1000 E3 Ω
specific electrical resistance: < 6000 E2 Ω

Temperature range:
Maximum temperature 80 °C.
The melting point is 165 °C.

Drawings

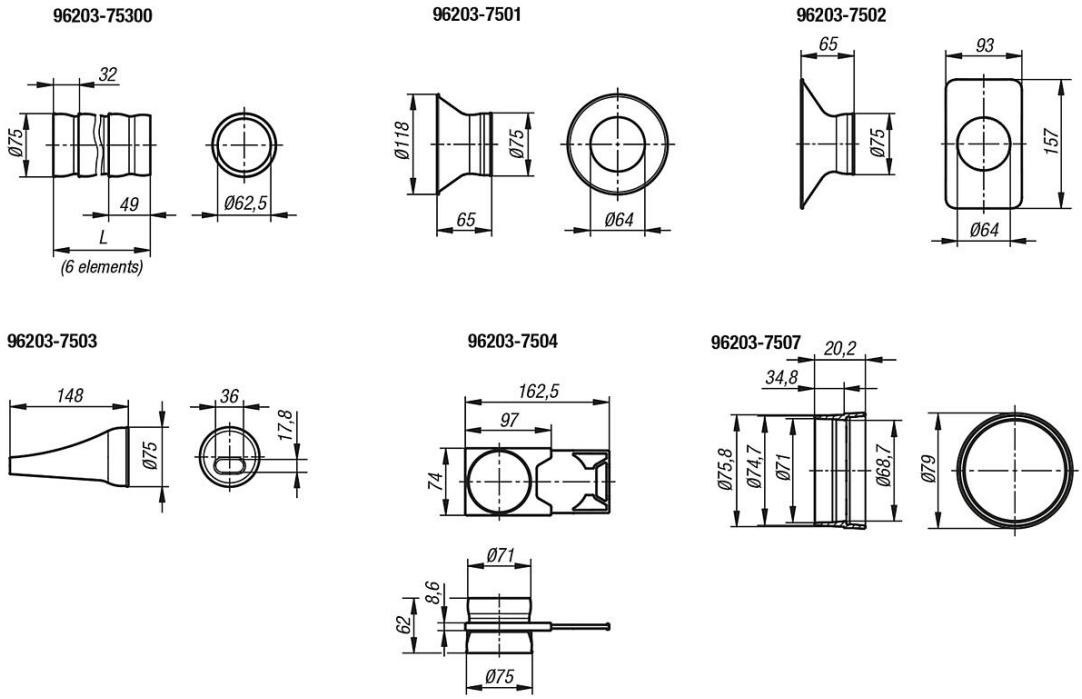

Overview of items

Order No.	Article description	Item	Version 1	Image
96203-75300	FLEXIBLE HOSE SIZE:75 L=300, BLACK	Flexible Hose		
96203-7501	ROUND NOZZLE SIZE:75	Round Nozzle		
96203-7502	RECTANGULAR NOZZLE SIZE:75	Rectangular Nozzle		
96203-7503	OVAL NOZZLE CONICAL SIZE:75	Oval Nozzle	conical	
96203-7504	GATE VALVE SIZE:75	Gate Valve		
96203-7507	ADAPTER FÜR BLECHROHR SIZE:75 PLASTIC	Adapter		