norelem

# ALUMINIUM PROFILES

+ ACCESSORIES

# CONTENTS


| | |
|---|---|
| Image index | P. 14 – 16 |
| Aluminium profiles | P. 17 – 30 |
| Connecting technology | P. 31 – 38 |
| Connectors | P. 39 – 60 |
| Covers | P. 61 – 68 |
| Grips | P. 69 – 74 |
| Locks | P. 75 – 78 |
| Hinges | P. 79 – 92 |
| Base elements | P. 93 – 102 |



**GERMANY**
norelem Normelemente KG
Volmarstraße 1
71706 Markgröningen
Tel. +49 7145 206-41
Fax. +49 7145 206-66
info@norelem.de
www.norelem.de

**FRANCE**
norelem SAS
5, rue des Libellules
10280 Fontaine-les-Grès
Tel. +33 03 25 71 89 30
info@norelem.fr
www.norelem.fr

**SWITZERLAND**
norelem Normelemente AG
Chli Ebnet 1
6403 Küssnacht am Rigi
Tel. +41 41 83387 00
info@norelem.ch
www.norelem.ch

**UNITED KINGDOM**
norelem LTD
Innovation Centre
1 Devon Way
B31 2TS Birmingham
Tel. +44 121 222 5321
info@norelem.co.uk
www.norelem.co.uk

**SWEDEN**
norelem AB
Zakrisdalsvägen 26
653 42 Karlstad
Tel. +46 545 688 11
info@norelem.se
www.norelem.se



With the publication of this catalogue, all previous publications become invalid. Dimensions and other data correspond to the current level of technology. We reserve the right to make technical changes. We accept no liability for any printing errors. Any reprinting or reproduction – in whole or in part – is permitted only with our prior consent. Copyright: norelem Normelemente KG / WE10ENCAT1704 / Printed in Germany

You get a green light for all your other ideas with our full range of high quality standard parts from our complete catalogue THE BIG GREEN BOOK. Order your complimentary copy from www.norelem.com

THE FULL RANGE IN THE BIG GREEN BOOK

# GIVE YOUR IDEAS THE PROPER FRAME

All aluminium profiles and accessories are perfectly matched to each other so that they can be combined to become the optimal solution for your individual task.

The aluminium profiles are of excellent quality, natural tone anodized making them permanently scratch resistant and corrosion proof. Form tolerances comply with DIN EN 12020 part 2.

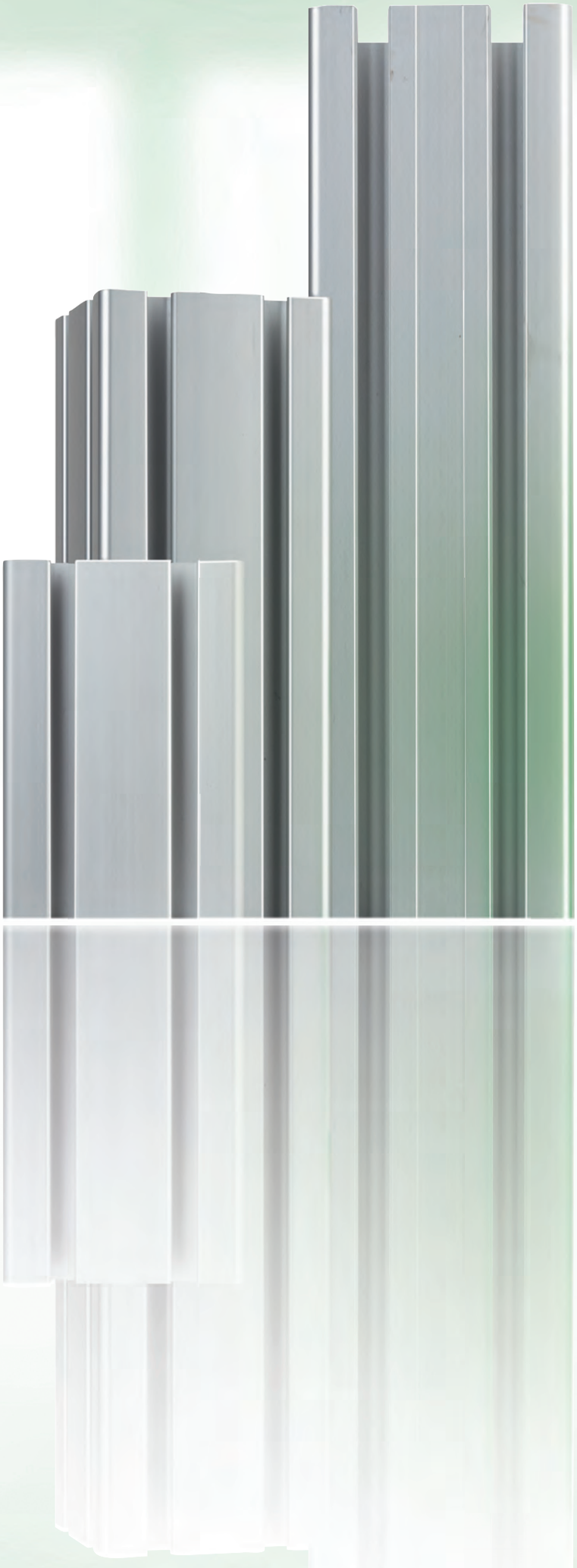

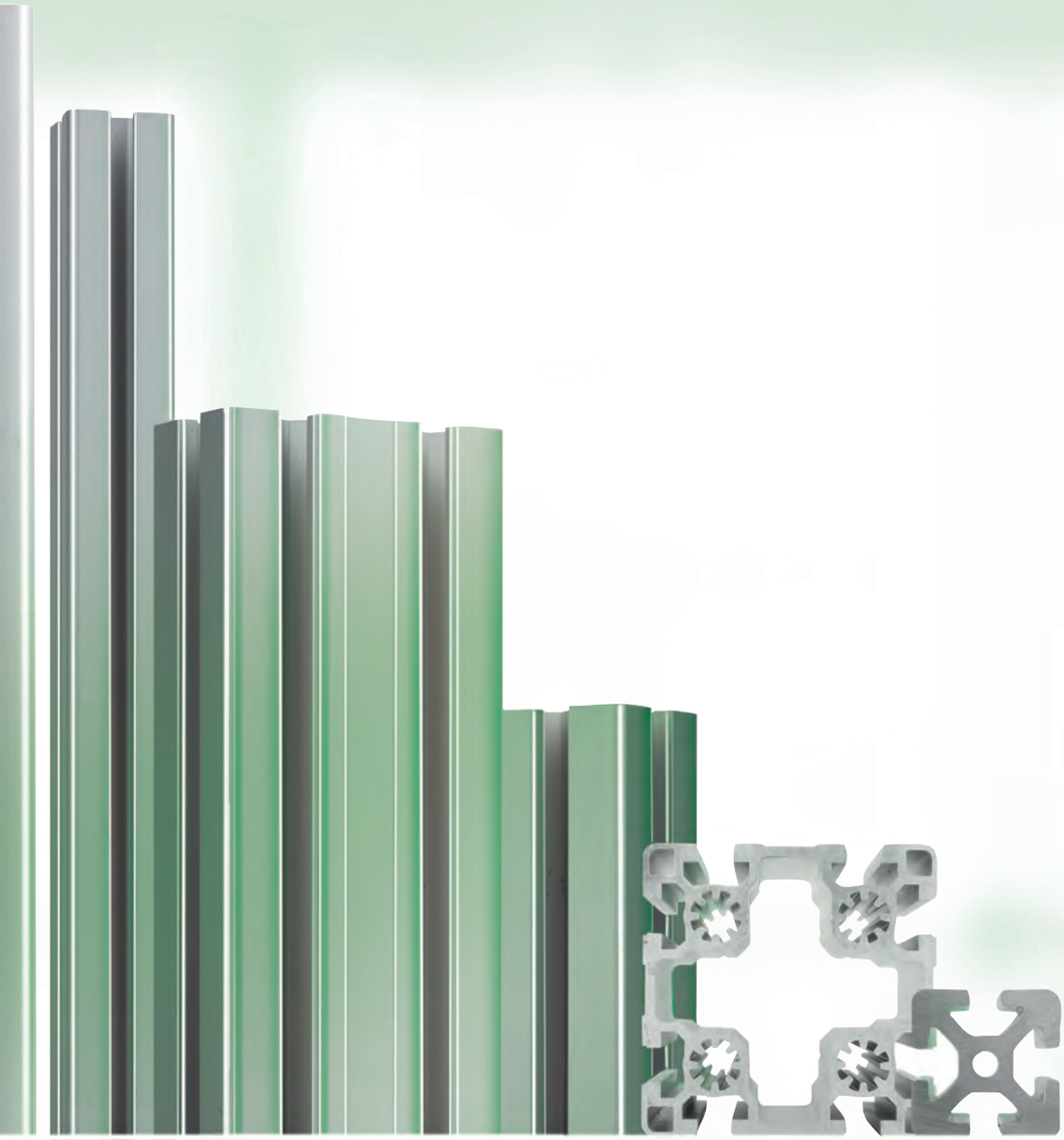

# the building block principle: diversity with system.

# 30 GRID

30 x 30
light
slot 6

30 x 60
light
slot 6

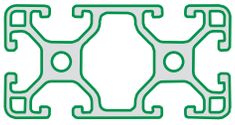

60 x 60
light
slot 6

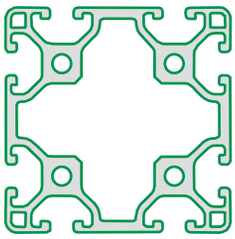

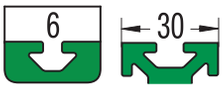


# 40 GRID

40 x 40
light
slot 8

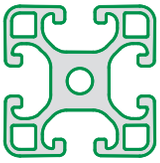

40 x 80
light
slot 8

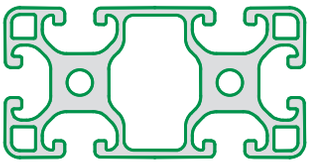

80 x 80
light
slot 8

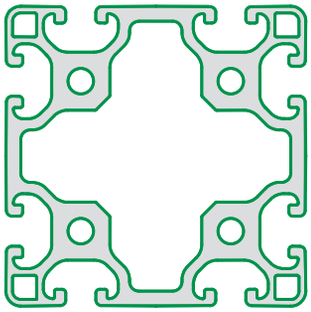

# 40 GRID

40 x 16
slot 8

40 x 40
slot 8

40 x 80
slot 8

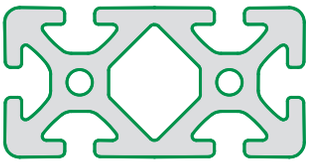

80 x 80
slot 8

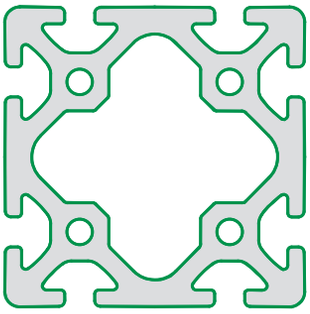

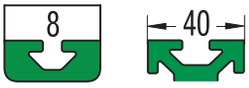


# Type I

## TWO FORMS, ONE ADVANTAGE: PERFECT

Our aluminium profiles are available in two different systems: Type I and Type B. This makes them fully compatible to all popular profiles on the market. We supply the grid sizes 30, 40 and 45 with the slot sizes 6, 8 and 10 mm. Altogether we offer 19 different profile cross sections from 30 x 30 to 90 x 90. We can cut the profiles for you to any desired length (max. 6000 mm).

# 40 GRID

40 x 40
light
slot 10

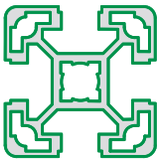

40 x 80
light
slot 10

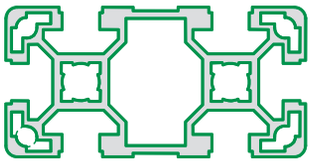

# 45 GRID

45 x 45
light
slot 10

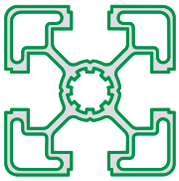

45 x 90
light
slot 10

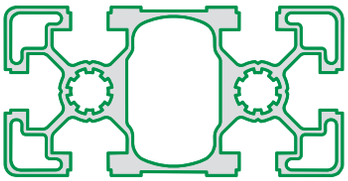

90 x 90
light
slot 10

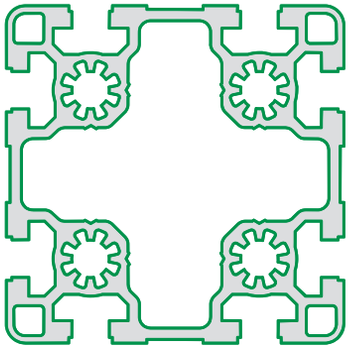

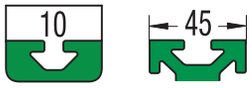


# 45 GRID

45 x 45
slot 10

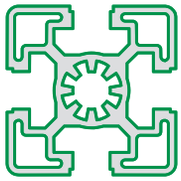

45 x 60
slot 10

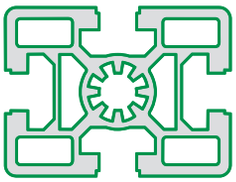

45 x 90
slot 10

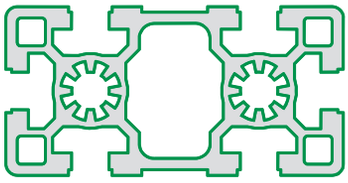

90 x 90
slot 10

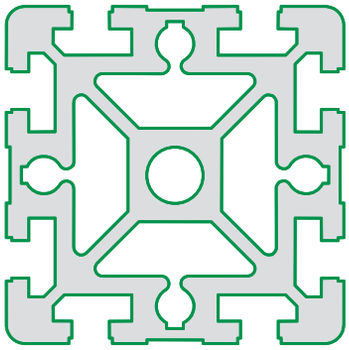

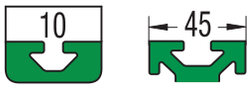


# Type B

**versatile, compatible with other profiles.**

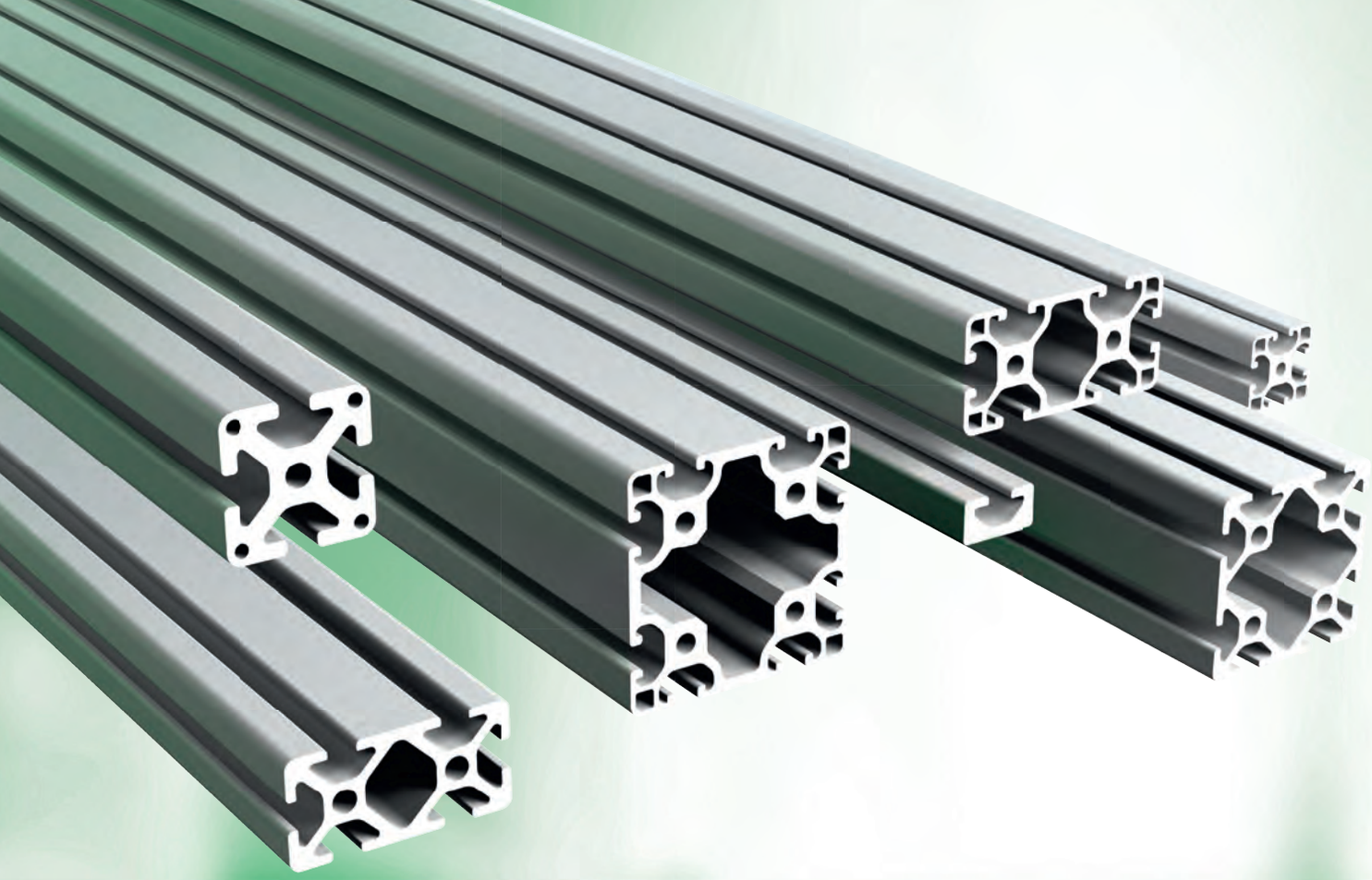

# norelem assembles.

Application example: The standard connecting set Type I is designed for producing a right angled connection between two aluminium profiles.

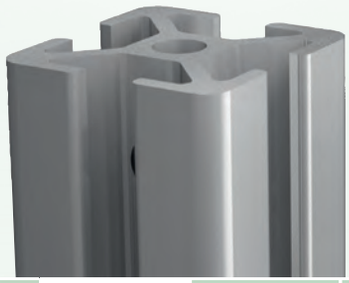

# LARGE RANGE, LOW COST

We offer a wide range of fasteners and accessories to match our aluminium profiles: connectors, joints, cover elements, slide rails, hinges, door handles, levelling feet and castors. With these all of your constructions can be optimally implemented.

Use standard tools to quickly and easily assemble and dismantle the accessories. Due to the high quality materials we use, the elements withstand high loads, have a long life expectancy and can be reused without problem.

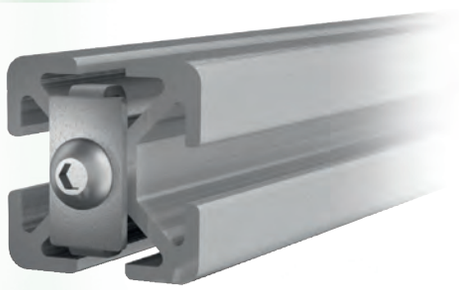

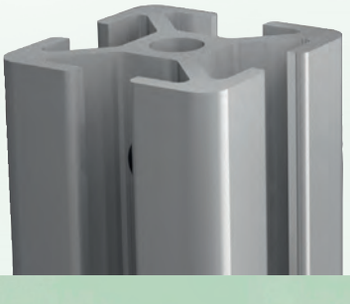

The connection is secured against rotation. On larger profiles, several connecting sets can mounted on the end face to attain a higher stability.

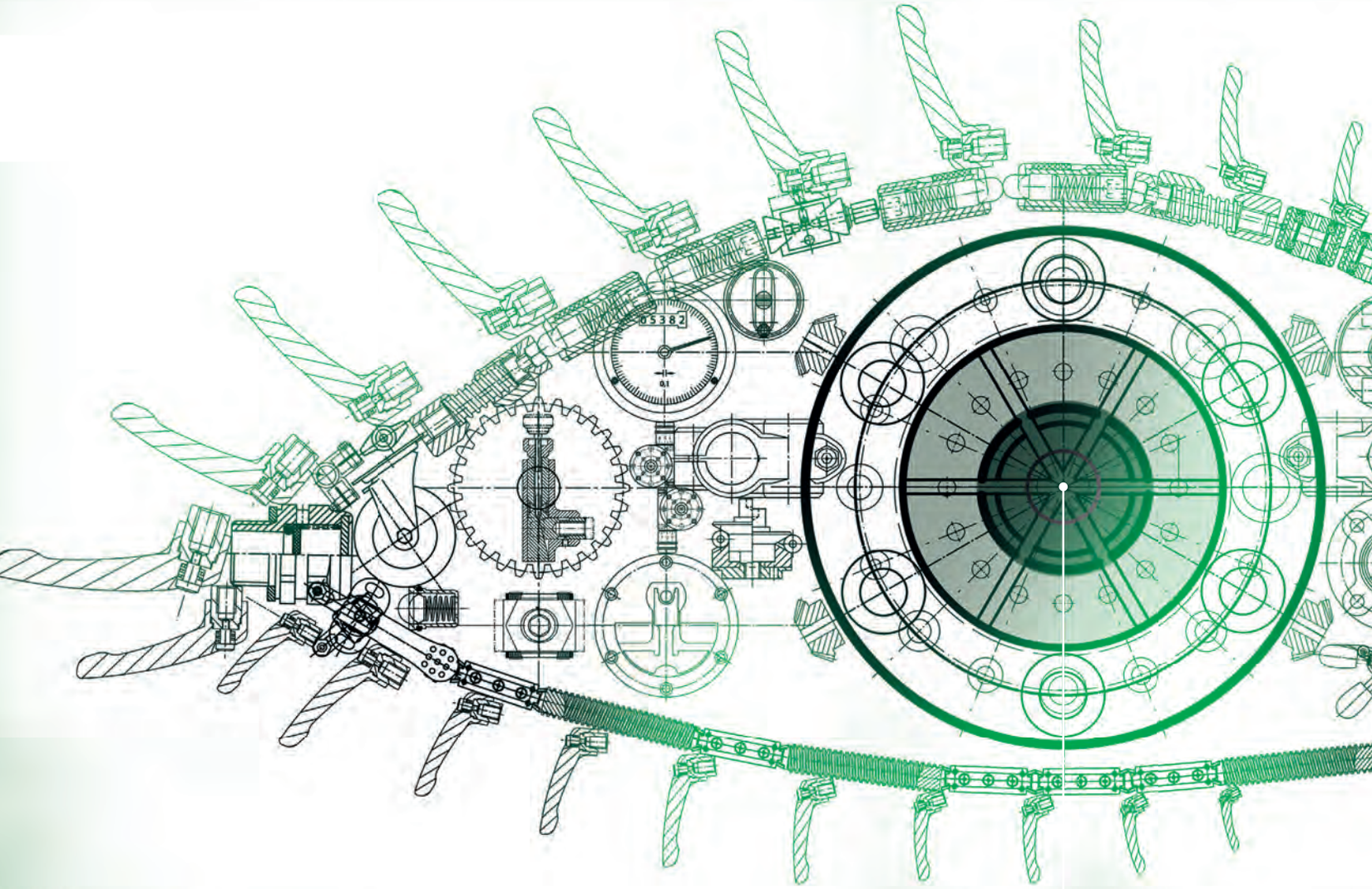

## WWW

All CAD data can also be found in our homepage: www.norelem.com

## DVD

We can send you a free of charge DVD with all norelem CAD data.

## APP

You can also access the CAD data using our norelem CAD app, this is available for free in the Apple App Store and on Google Play.

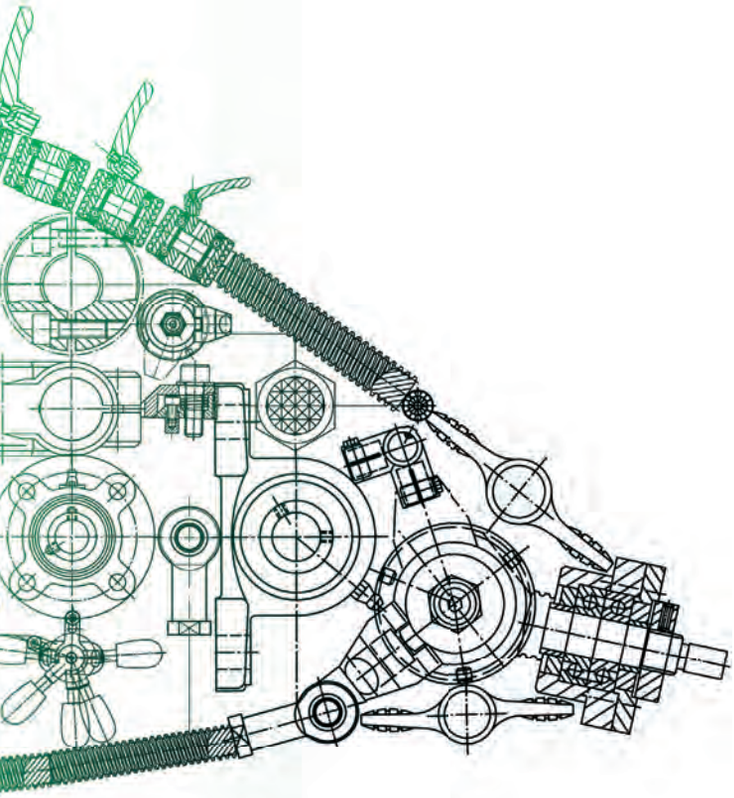

# CAD data: everything at a click.

## ONLINE SHOPS AND DOWNLOADS AT WWW.NORELEM.COM

Save time and effort by designing with CAD data. Our CAD library contains all relevant technical and geometrical data and components. The CAD data is also available in various formats so that they can easily be integrated into your system.

# norelem assembles

## Aluminium profiles

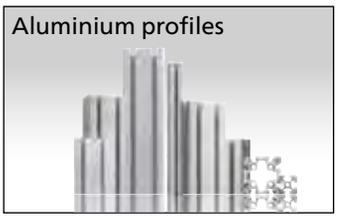

**10025**
Page 19

Aluminium profiles
30x30 light
Type I
6 30

**10025**
Page 19

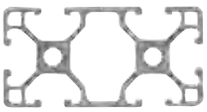

Aluminium profiles
30x60 light
Type I
6 30

**10025**
Page 20

Aluminium profiles
60x60 light
Type I
6 30

**10045**
Page 21

Aluminium profiles
40x40 light
Type I
8 40

**10045**
Page 21

Aluminium profiles
40x80 light
Type I
8 40

**10045**
Page 22

Aluminium profiles
80x80 light
Type I
8 40

**10048**
Page 23

Aluminium profiles
16x40
Type I
8 40

**10048**
Page 23

Aluminium profiles
40x40
Type I
8 40

**10048**
Page 24

Aluminium profiles
40x80
Type I
8 40

**10048**
Page 24

Aluminium profiles
80x80
Type I
8 40

**10142**
Page 25

Aluminium profiles
40x40 light
Type B
10 40

**10142**
Page 25

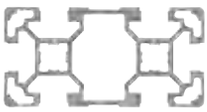

Aluminium profiles
40x80 light
Type B
10 40

**10157**
Page 26

Aluminium profiles
45x45 light
Type B
10 45

**10157**
Page 26

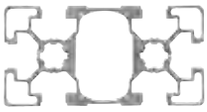

Aluminium profiles
45x90 light
Type B
10 45

**10157**
Page 27

Aluminium profiles
90x90 light
Type B
10 45

**10160**
Page 28

Aluminium profiles
45x45
Type B
10 45

**10160**
Page 28

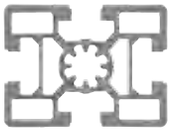

Aluminium profiles
45x60
Type B
10 45

**10160**
Page 29

Aluminium profiles
45x90
Type B
10 45

**10160**
Page 29

Aluminium profiles
90x90
Type B
10 45

## Connecting technology

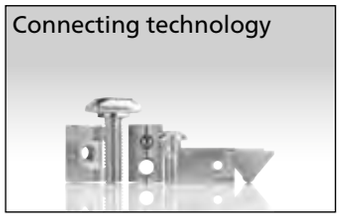

**07071**
Page 32

Slot nuts
twist-in Type I

**07073**
Page 33

Slot nuts
twist-in, keyed Type I

**07075**
Page 34

Slot nuts
strong Type I

**07077**
Page 35

Slot nuts
twist-in Type B

**07078**
Page 35

Slot nuts
twist-in with spring Type B

**07090**
Page 36

T-nuts

**07094**
Page 37

Hammer-head screws

**07218**
Page 38

Flange nut

## Connectors

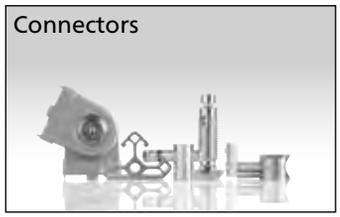

**10200**
Page 40

Connecting sets standard
Type I

**10202**
Page 41

Connecting sets universal
Type I

**10204**
Page 42

Connecting sets central
Type I

**10205**
Page 43

Connecting sets central
Type B

**10206**
Page 44

Connecting sets central
Type B

**10210**
Page 45

Connecting sets automatic
Type I

# norelem assembles

**10212**
Page 46

Connecting sets automatic
Type B

**10215**
Page 47

Pin connector sets
Type B

**10220**
Page 48

Cube connector sets
Type B

**10228**
Page 49

Central screw
Type B

**10230**
Page 50

Butt connector set automatic
Type I

**10240**
Page 51

Straps

**10242**
Page 52

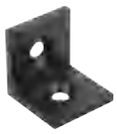

Angles

**10244**
Page 53

Fastening sets
for straps und angles

**10250**
Page 54

Angle sets
Type I

**10252**
Page 55

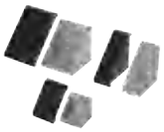

Angle sets
Type B

**10260**
Page 56

Angle elements T1
Type I

**10261**
Page 57

Angle elements T2
Type I

**10265**
Page 58

Clamping angle
Type I

**10266**
Page 59

Joint angle
Type I

**10270**
Page 60

Joints
Type B und Type I

Covers

**10300**
Page 62

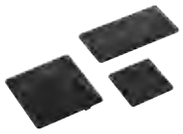

End caps
Type B and Type I

**10315**
Page 63

Cover and adapter profiles
Type B and Type I

**10320**
Page 64

Cover profile
Type I

**10330**
Page 64

Slide rail
Type I

**10347**
Page 66-67

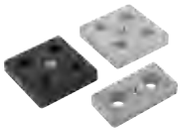

Foot plates
Type B and Type I

Grips

**06904**
Page 70

Pull handles

**06909**
Page 71

Pull handles arch

**06920**
Page 71

Pull handles oval

**06926**
Page 72

Pull handles tubular

**06937**
Page 72

Pull handles tubular

**06939**
Page 73

Pull handles tubular

**06975**
Page 74

Pull handles angled

Locks

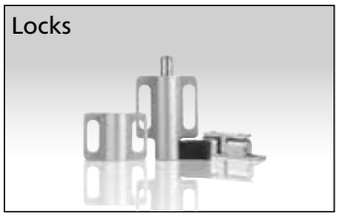

**03075**
Page 76

Double ball catch

**03102**
Page 77

Barrel slide bolts

Hinges

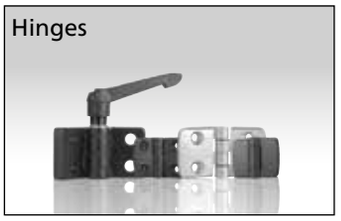

**27850**
Page 81

Hinges
plastic, lift-off, left

**27850**
Page 82

Hinges
plastic, lift-off, right

**27852**
Page 83

Hinges
plastic

**27853**
Page 84

Hinges
plastic, with locking lever

**27856**
Page 85

Hinges
plastic, lift-off, with guide tabs

**27857**
Page 86

Hinges
plastic, detent

**27858**
Page 87

Hinges
plastic, with adjustable friction

**27865**
Page 88

Hinges
die-cast zinc, with elongated holes

**27868**
Page 89

Hinges
die-cast zinc, with locking lever

**27870**
Page 90

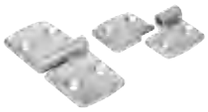

Hinges
aluminium, lift-off, left

**27870**
Page 91

Hinges
aluminium, lift-off, right

**27872**
Page 92

Hinges
aluminium

## Base elements

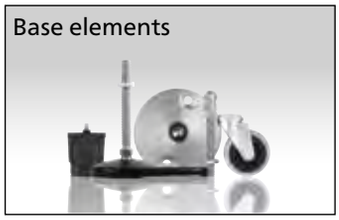

**27800**
Page 95

Swivel feet plates
plastic

**27801**
Page 96-97

Swivel feet plates
die-cast zinc or stainless steel

**27802**
Page 98

Swivel feet plates extended
die-cast zinc

**27803**
Page 99

Swivel feet plates
stainless steel

**27810**
Page 100

Swivel feet threaded spindles
steel or stainless steel

**27840**
Page 101

Levelling feet
for aluminium profiles

**95010**
Page 102

Swivel and fixed castors
appliance, standard version

# 10000

## Aluminium profiles

# Technical information for aluminium profiles

## Type I and Type B

**Tolerances:**
Form deviations such as straightness and flatness tolerance acc. to DIN EN 12020 Part 2.

**Surface:**
The aluminium profiles are natural colour anodized making them permanently scratch-resistant and corrosion proof. The all-round anodize film makes saw cuts particularly low burr.
Anodizing: E6EV1
Film thickness: 10 µm

**Mechanical values:**
(apply only in thrust axis)
Tensile strength Rm: min. 245 N/mm²
Yield point Rp 0.2: min. 195 N/mm²
A5: 10% rupture stress
A10: 8% rupture stress
Density: 2.7 kg/dm³
Linear expansion coefficient: 23.6x10-6 1/K
Elasticity module E: approximately 70,000 N/mm²
Hardness: approximately 75 HB -2.5/187.5

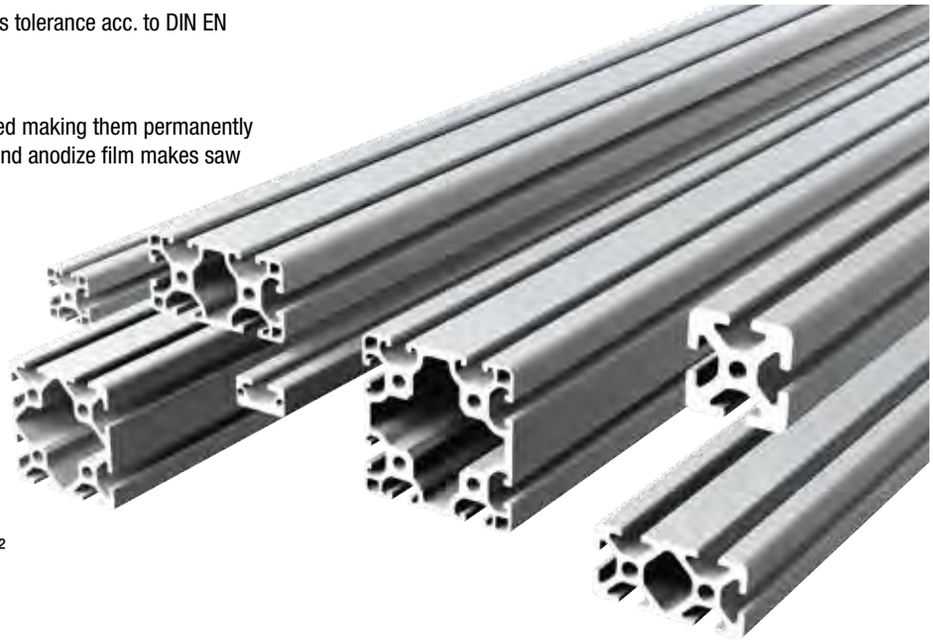

**Slot sizes and grid pitches**

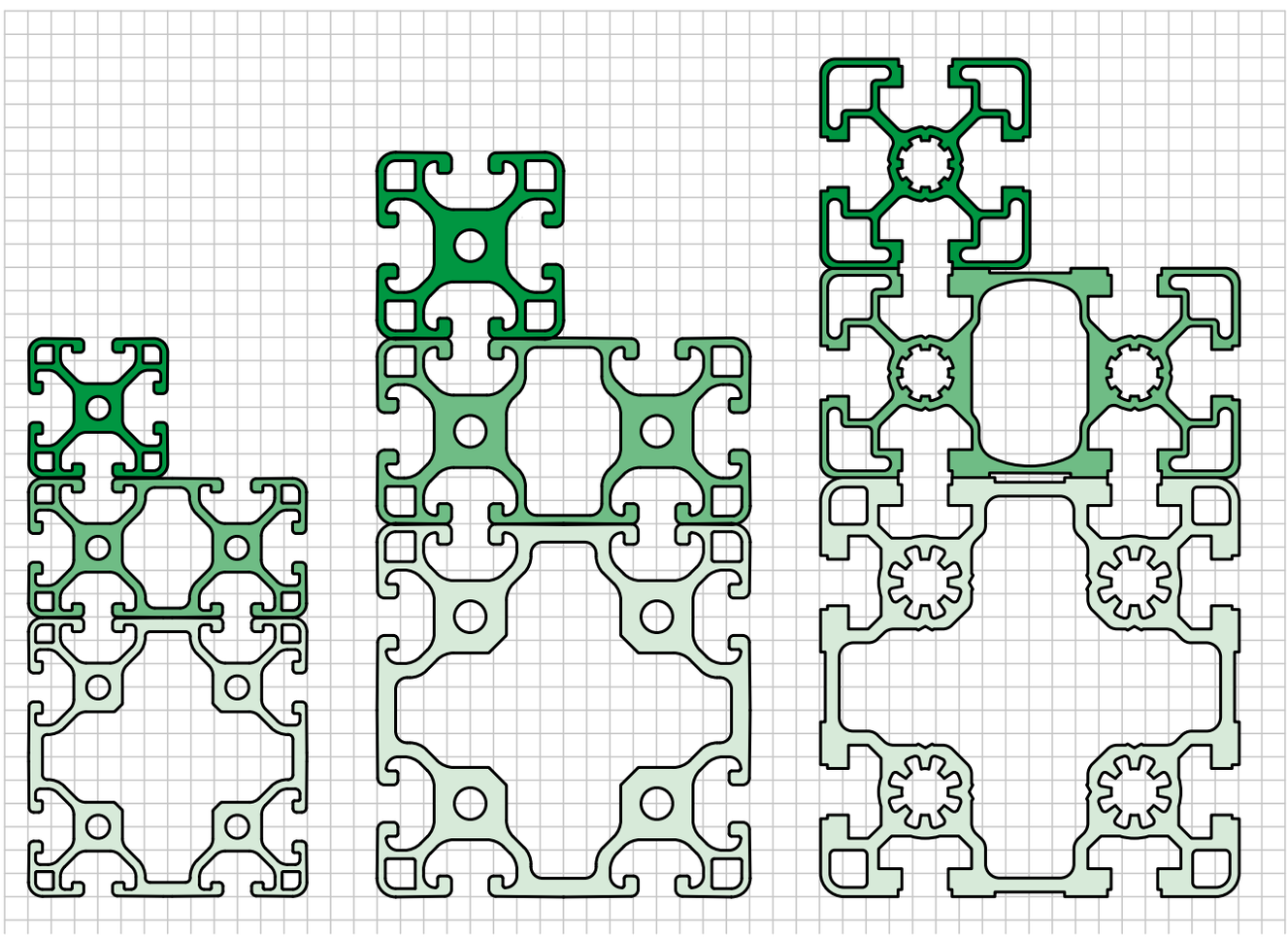

# Aluminium profiles 30x30 light

Type I

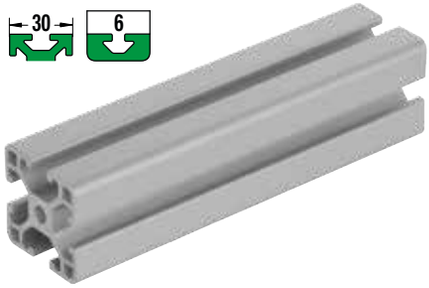


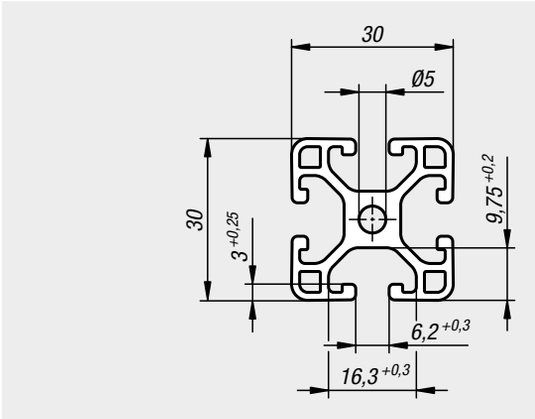


**Material:**
Aluminium EN AW-6063 T66 (AlMgSi 0.5 F25)

**Version:**
Artificially aged, natural colour anodized.

**Sample order:**
nlm 10025-063030X*
* Include length only in full mm increments.
Maximum available length 6000 mm.

**Note:**
Lightweight aluminium profile for weight-optimised constructions.

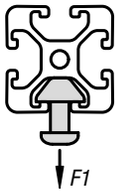


| Order No. | Slot width | Profile | Ix $cm^4$ | Iy $cm^4$ | Wx $cm^3$ | Wy $cm^3$ | Profile area $cm^2$ | F1 max. kN | Approx. weight kg/m |
|---|---|---|---|---|---|---|---|---|---|
| **10025-063030X****** | 6 | 30x30 | 2,9 | 2,9 | 1,94 | 1,94 | 3,43 | 0,5 | 0,93 |



# Aluminium profiles 30x60 light

Type I

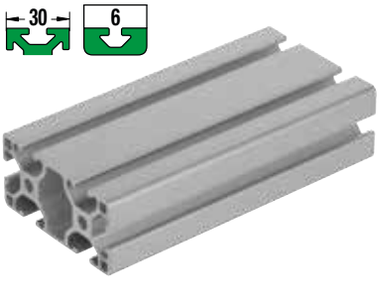


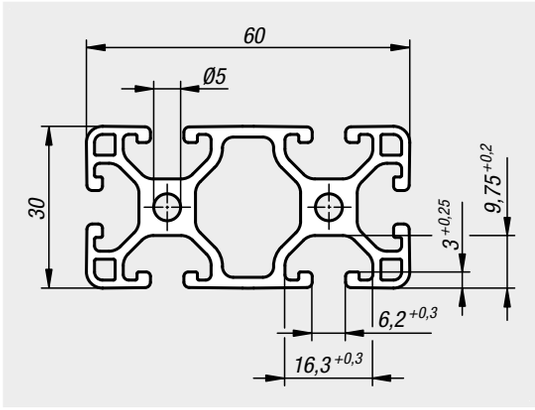


**Material:**
Aluminium EN AW-6063 T66 (AlMgSi 0.5 F25)

**Version:**
Artificially aged, natural colour anodized.

**Sample order:**
nlm 10025-063060X*
* Include length only in full mm increments.
Maximum available length 6000 mm.

**Note:**
Lightweight aluminium profile for weight-optimised constructions.

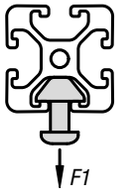


| Order No. | Slot width | Profile | Ix $cm^4$ | Iy $cm^4$ | Wx $cm^3$ | Wy $cm^3$ | Profile area $cm^2$ | F1 max. kN | Approx. weight kg/m |
|---|---|---|---|---|---|---|---|---|---|
| **10025-063060X****** | 6 | 30x60 | 5,54 | 21,22 | 3,69 | 7,07 | 6,13 | 0,5 | 1,65 |

# Aluminium profiles 60x60 light

Type I

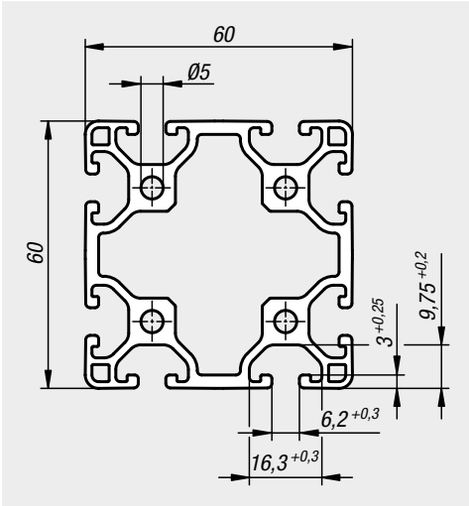


**Material:**
Aluminium EN AW-6063 T66 (AlMgSi 0.5 F25)

**Version:**
Artificially aged, natural colour anodized.

**Sample order:**
nlm 10025-066060X*
* Include length only in full mm increments.
Maximum available length 6000 mm.

**Note:**
Lightweight aluminium profile for weight-optimised constructions.

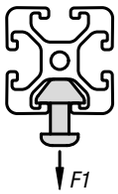


| Order No. | Slot width | Profile | Ix $cm^4$ | Iy $cm^4$ | Wx $cm^3$ | Wy $cm^3$ | Profile area $cm^2$ | F1 max. kN | Approx. weight kg/m |
|---|---|---|---|---|---|---|---|---|---|
| **10025-066060X****** | 6 | 60x60 | 39,47 | 39,47 | 13,16 | 13,16 | 10,01 | 0,5 | 2,70 |

# Notes

# Aluminium profiles 40x40 light

Type I

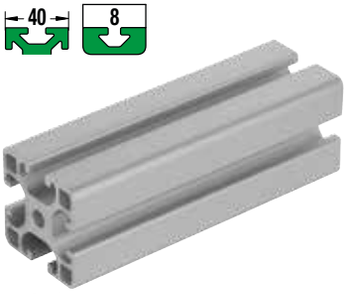

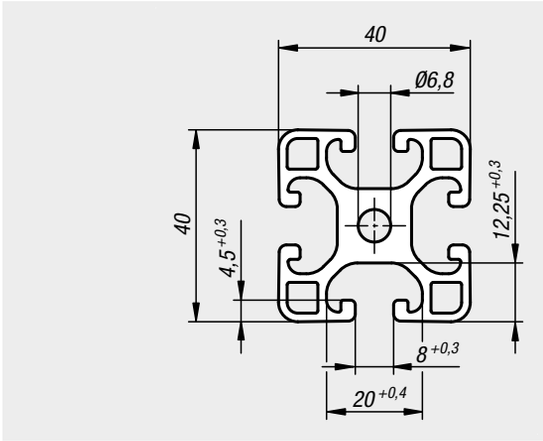


**Material:**
Aluminium EN AW-6063 T66 (AlMgSi 0.5 F25)

**Version:**
Artificially aged, natural colour anodized.

**Sample order:**
nlm 10045-084040X*
* Include length only in full mm increments.
Maximum available length 6000 mm.

**Note:**
Lightweight aluminium profile for weight-optimised constructions.

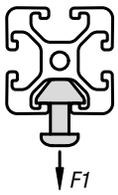


| Order No. | Slot width | Profile | Ix cm$^4$ | Iy cm$^4$ | Wx cm$^3$ | Wy cm$^3$ | Profile area cm$^2$ | F1 max. kN | Approx. weight kg/m |
|---|---|---|---|---|---|---|---|---|---|
| **10045-084040X****** | 8 | 40x40 | 9,1 | 9,1 | 4,55 | 4,55 | 6,47 | 2,5 | 1,75 |



# Aluminium profiles 40x80 light

Type I

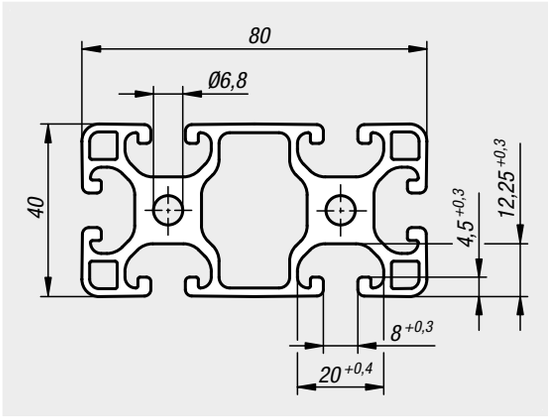


**Material:**
Aluminium EN AW-6063 T66 (AlMgSi 0.5 F25)

**Version:**
Artificially aged, natural colour anodized.

**Sample order:**
nlm 10045-084080X*
* Include length only in full mm increments.
Maximum available length 6000 mm.

**Note:**
Lightweight aluminium profile for weight-optimised constructions.

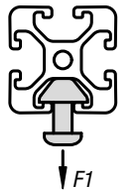


| Order No. | Slot width | Profile | Ix cm$^4$ | Iy cm$^4$ | Wx cm$^3$ | Wy cm$^3$ | Profile area cm$^2$ | F1 max. kN | Approx. weight kg/m |
|---|---|---|---|---|---|---|---|---|---|
| **10045-084080X****** | 8 | 40x80 | 16,77 | 70,2 | 8,45 | 17,56 | 11,3 | 2,5 | 3,08 |

# Aluminium profiles 80x80 light

Type I

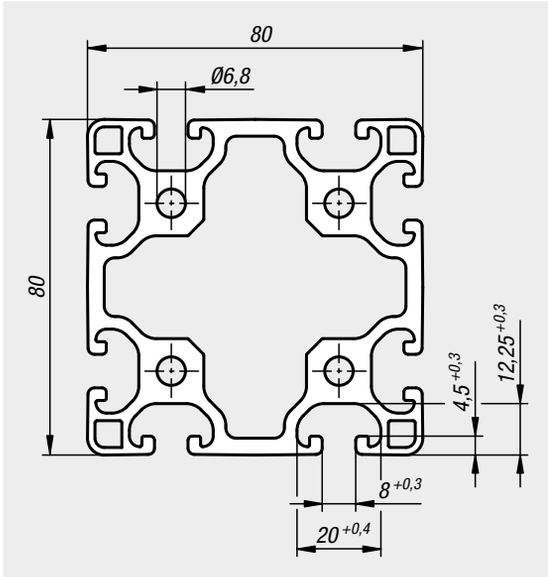


**Material:**
Aluminium EN AW-6063 T66 (AlMgSi 0.5 F25)

**Version:**
Artificially aged, natural colour anodized.

**Sample order:**
nlm 10045-088080X*
* Include length only in full mm increments.
Maximum available length 6000 mm.

**Note:**
Lightweight aluminium profile for weight-optimised constructions.

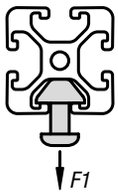


| Order No. | Slot width | Profile | Ix $cm^4$ | Iy $cm^4$ | Wx $cm^3$ | Wy $cm^3$ | Profile area $cm^2$ | F1 max. kN | Approx. weight kg/m |
|---|---|---|---|---|---|---|---|---|---|
| **10045-088080X****** | 8 | 80x80 | 130,1 | 130,1 | 33,2 | 33,2 | 19,3 | 2,5 | 2,17 |

# Notes

# Aluminium profiles 16x40

Type I

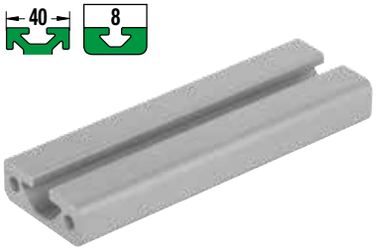

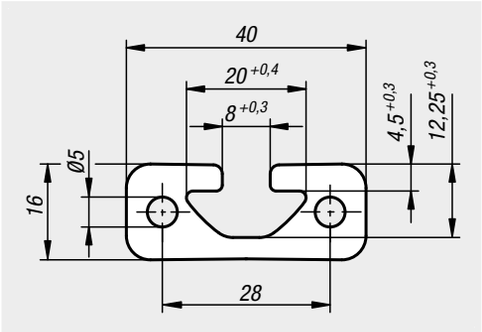


**Material:**
Aluminium EN AW-6063 T66 (AlMgSi 0.5 F25)

**Version:**
Artificially aged, natural colour anodized.

**Sample order:**
nlm 10048-081640X*
* Include length only in full mm increments.
Maximum available length 6000 mm.

**Note:**
Aluminium profile for general constructions.

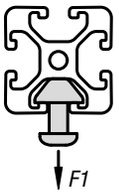


| Order No. | Slot width | Profile | Ix cm$^4$ | Iy cm$^4$ | Wx cm$^3$ | Wy cm$^3$ | Profile area cm$^2$ | F1 max. kN | Approx. weight kg/m |
|---|---|---|---|---|---|---|---|---|---|
| **10048-081640X****** | 8 | 16x40 | 1,06 | 6,75 | 1,25 | 3,37 | 4,15 | 5 | 1,12 |

10048

# Aluminium profiles 40x40

Type I

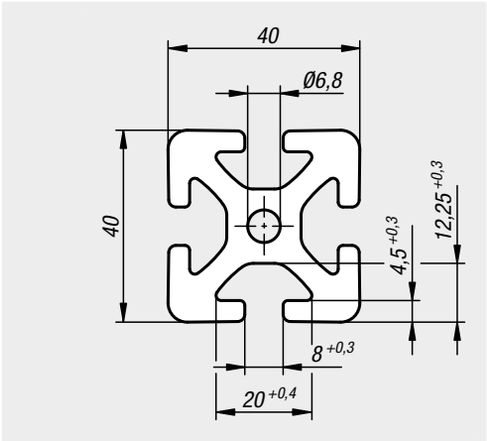


**Material:**
Aluminium EN AW-6063 T66 (AlMgSi 0.5 F25)

**Version:**
Artificially aged, natural colour anodized.

**Sample order:**
nlm 10048-084040X*
* Include length only in full mm increments.
Maximum available length 6000 mm.

**Note:**
Aluminium profile for general constructions.

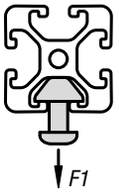


| Order No. | Slot width | Profile | Ix cm$^4$ | Iy cm$^4$ | Wx cm$^3$ | Wy cm$^3$ | Profile area cm$^2$ | F1 max. kN | Approx. weight kg/m |
|---|---|---|---|---|---|---|---|---|---|
| **10048-084040X****** | 8 | 40x40 | 13,85 | 13,85 | 6,95 | 6,95 | 9,05 | 2,5 | 2,45 |

10048

# Aluminium profiles 40x80

Type I

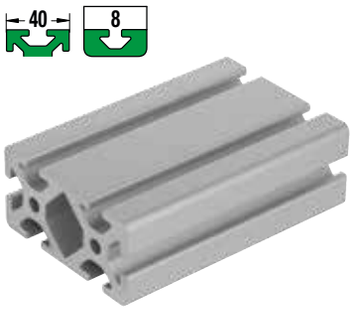

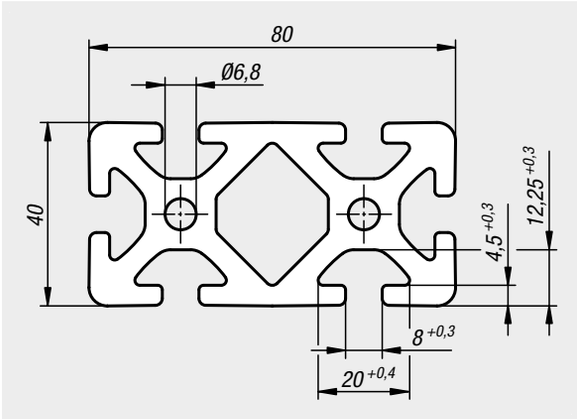


**Material:**
Aluminium EN AW-6063 T66 (AlMgSi 0.5 F25)

**Version:**
Artificially aged, natural colour anodized.

**Sample order:**
nlm 10048-084080X*
* Include length only in full mm increments.
Maximum available length 6000 mm.

**Note:**
Aluminium profile for general constructions.

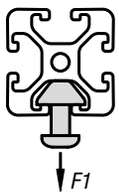


| Order No. | Slot width | Profile | Ix cm$^4$ | Iy cm$^4$ | Wx cm$^3$ | Wy cm$^3$ | Profile area cm$^2$ | F1 max. kN | Approx. weight kg/m |
|---|---|---|---|---|---|---|---|---|---|
| **10048-084080X****** | 8 | 40x80 | 26,7 | 101,02 | 13,39 | 25,15 | 16,52 | 5 | 4,51 |

10048

# Aluminium profiles 80x80

Type I

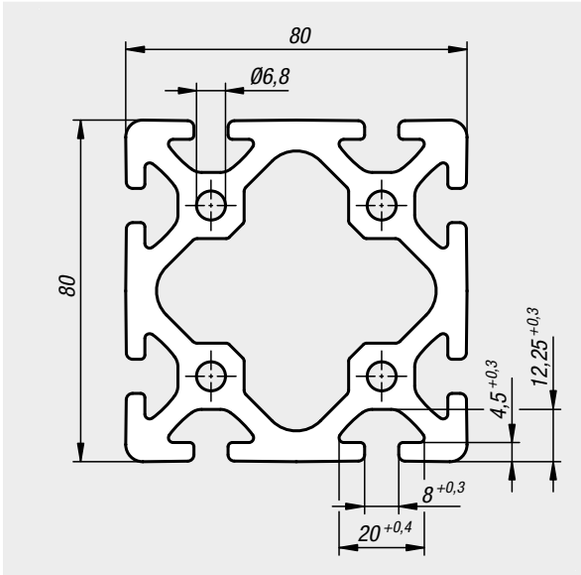


**Material:**
Aluminium EN AW-6063 T66 (AlMgSi 0.5 F25)

**Version:**
Artificially aged, natural colour anodized.

**Sample order:**
nlm 10048-088080X*
* Include length only in full mm increments.
Maximum available length 6000 mm.

**Note:**
Aluminium profile for general constructions.

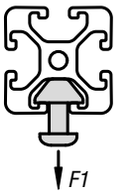


| Order No. | Slot width | Profile | Ix cm$^4$ | Iy cm$^4$ | Wx cm$^3$ | Wy cm$^3$ | Profile area cm$^2$ | F1 max. kN | Approx. weight kg/m |
|---|---|---|---|---|---|---|---|---|---|
| **10048-088080X****** | 8 | 80x80 | 187,8 | 187,8 | 46,93 | 46,93 | 26,65 | 2,5 | 7,20 |

# Aluminium profiles 40x40 light

Type B

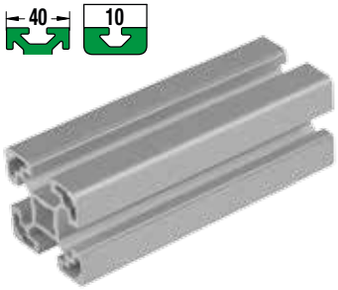

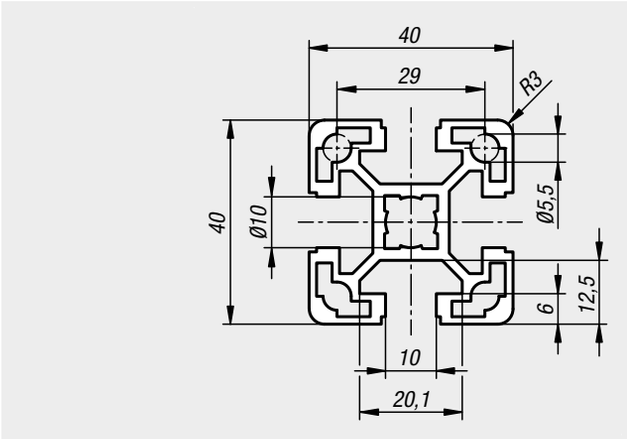


**Material:**
Aluminium EN AW-6063 T66 (AlMgSi 0.5 F25)

**Version:**
Artificially aged, natural colour anodized.

**Sample order:**
nlm 10142-104040X*
* Include length only in full mm increments.
Maximum available length 6000 mm.

**Note:**
Lightweight aluminium profile for weight-optimised constructions.

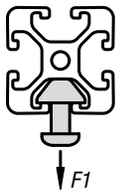


| Order No. | Slot width | Profile | Ix $cm^4$ | Iy $cm^4$ | Wx $cm^3$ | Wy $cm^3$ | Profile area $cm^2$ | F1 max. kN | Approx. weight kg/m |
|---|---|---|---|---|---|---|---|---|---|
| **10142-104040X****** | 10 | 40x40 | 9,06 | 9,06 | 4,53 | 4,53 | 5,61 | 7 | 1,51 |



# Aluminium profiles 40x80 light

Type B

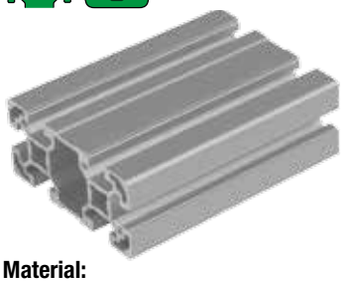

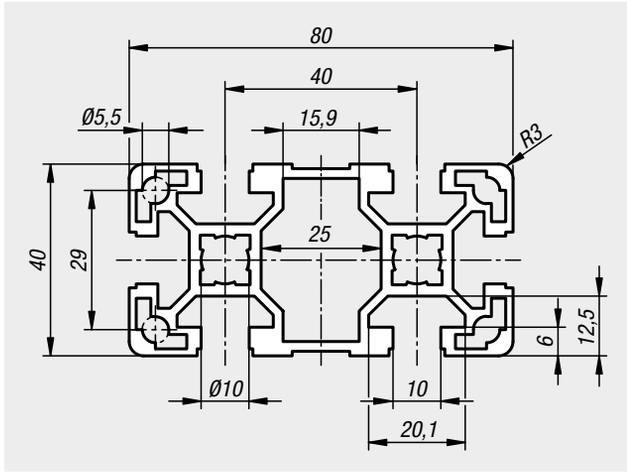


**Material:**
Aluminium EN AW-6063 T66 (AlMgSi 0.5 F25)

**Version:**
Artificially aged, natural colour anodized.

**Sample order:**
nlm 10142-104080X*
* Include length only in full mm increments.
Maximum available length 6000 mm.

**Note:**
Lightweight aluminium profile for weight-optimised constructions.

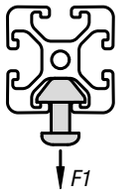


| Order No. | Slot width | Profile | Ix $cm^4$ | Iy $cm^4$ | Wx $cm^3$ | Wy $cm^3$ | Profile area $cm^2$ | F1 max. kN | Approx. weight kg/m |
|---|---|---|---|---|---|---|---|---|---|
| **10142-104080X****** | 10 | 40x80 | 63,24 | 17,23 | 15,81 | 8,61 | 9,86 | 7 | 2,67 |

# Aluminium profiles 45x45 light

Type B

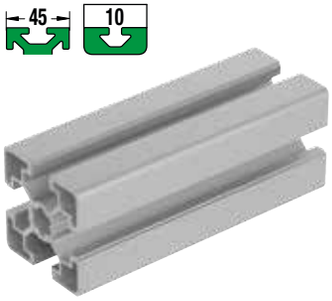

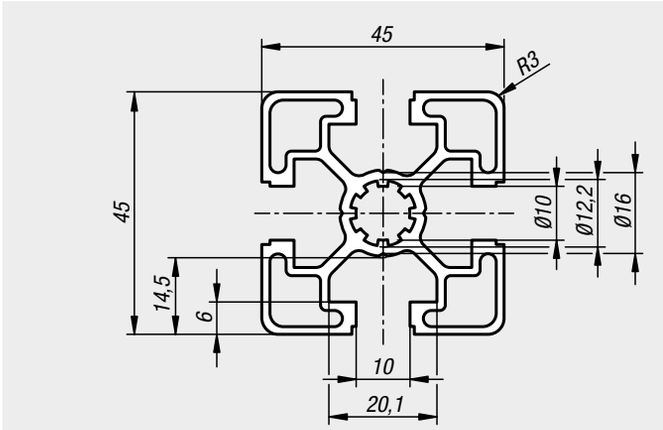


**Material:**
Aluminium EN AW-6063 T66 (AlMgSi 0.5 F25)

**Version:**
Artificially aged, natural colour anodized.

**Sample order:**
nlm 10157-104545X*
* Include length only in full mm increments.
Maximum available length 6000 mm.

**Note:**
Lightweight aluminium profile for weight-optimised constructions.

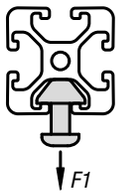


| Order No. | Slot width | Profile | Ix cm⁴ | Iy cm⁴ | Wx cm³ | Wy cm³ | Profile area cm² | F1 max. kN | Approx. weight kg/m |
|---|---|---|---|---|---|---|---|---|---|
| **10157-104545X****** | 10 | 45x45 | 11 | 11 | 4,89 | 4,89 | 5,73 | 7 | 1,55 |



# Aluminium profiles 45x90 light

Type B

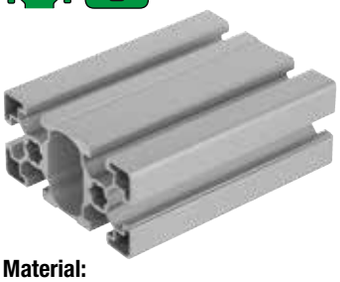

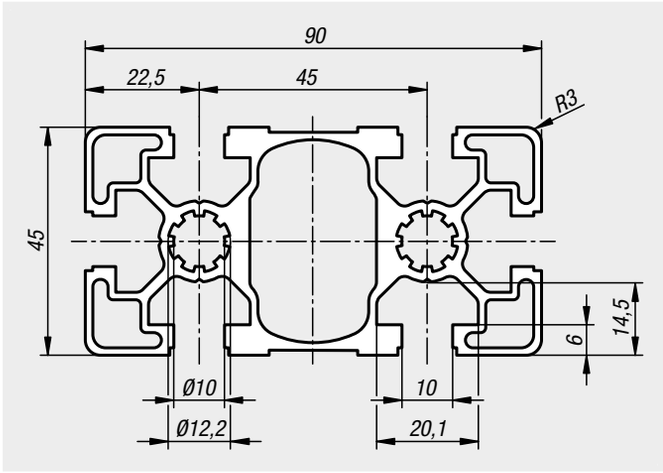


**Material:**
Aluminium EN AW-6063 T66 (AlMgSi 0.5 F25)

**Version:**
Artificially aged, natural colour anodized.

**Sample order:**
nlm 10157-104590X*
* Include length only in full mm increments.
Maximum available length 6000 mm.

**Note:**
Lightweight aluminium profile for weight-optimised constructions.

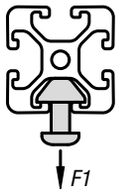


| Order No. | Slot width | Profile | Ix cm⁴ | Iy cm⁴ | Wx cm³ | Wy cm³ | Profile area cm² | F1 max. kN | Approx. weight kg/m |
|---|---|---|---|---|---|---|---|---|---|
| **10157-104590X****** | 10 | 45x90 | 81,82 | 23,53 | 18,18 | 1,46 | 11,29 | 7 | 3,05 |

# Aluminium profiles 90x90 light

Type B

**Material:**
Aluminium EN AW-6063 T66 (AlMgSi 0.5 F25)

**Version:**
Artificially aged, natural colour anodized.

**Sample order:**
nlm 10157-109090X*
* Include length only in full mm increments.
Maximum available length 6000 mm.

**Note:**
Lightweight aluminium profile for weight-optimised constructions.

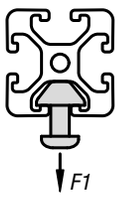


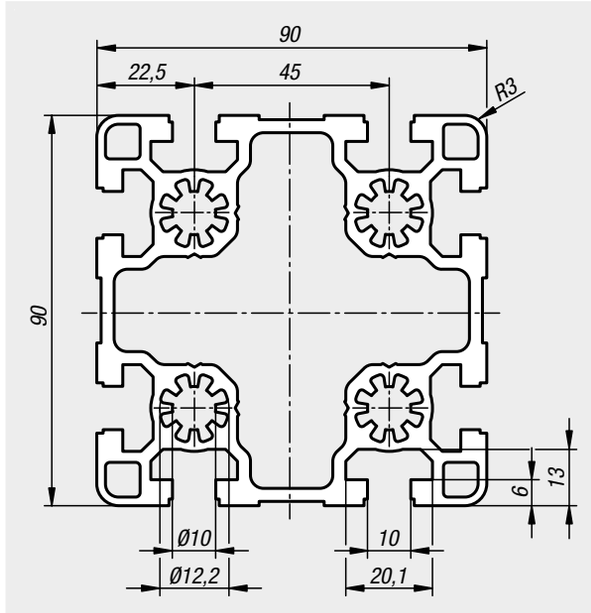


| Order No. | Slot width | Profile | Ix $cm^4$ | Iy $cm^4$ | Wx $cm^3$ | Wy $cm^3$ | Profile area $cm^2$ | F1 max. kN | Approx. weight kg/m |
|---|---|---|---|---|---|---|---|---|---|
| **10157-109090X****** | 10 | 90x90 | 210,5 | 210,5 | 46,78 | 46,78 | 23,46 | 12 | 6,34 |

# Notes

# Aluminium profiles 45x45

Type B

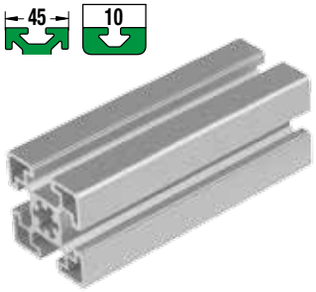

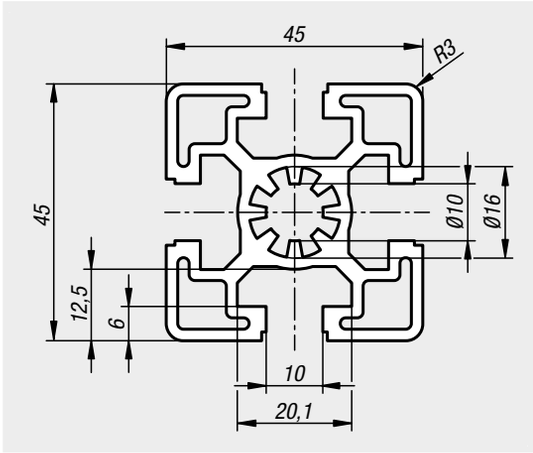


**Material:**
Aluminium EN AW-6063 T66 (AlMgSi 0.5 F25)

**Version:**
Artificially aged, natural colour anodized.

**Sample order:**
nlm 10160-104545X*
* Include length only in full mm increments.
Maximum available length 6000 mm.

**Note:**
Aluminium profile for general constructions.

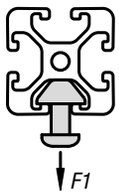


| Order No. | Slot width | Profile | Ix cm$^4$ | Iy cm$^4$ | Wx cm$^3$ | Wy cm$^3$ | Profile area cm$^2$ | F1 max. kN | Approx. weight kg/m |
|---|---|---|---|---|---|---|---|---|---|
| **10160-104545X****** | 10 | 45x45 | 13,94 | 13,94 | 6,91 | 6,91 | 7,5 | 12 | 2,03 |



# Aluminium profiles 45x60

Type B

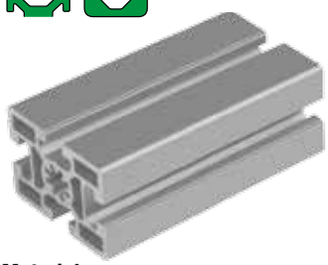

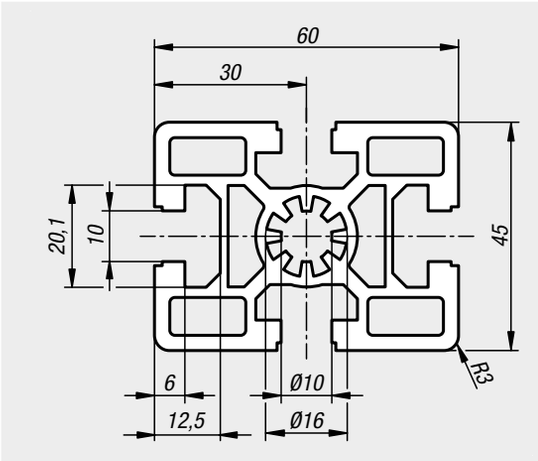


**Material:**
Aluminium EN AW-6063 T66 (AlMgSi 0.5 F25)

**Version:**
Artificially aged, natural colour anodized.

**Sample order:**
nlm 10160-104560X*
* Include length only in full mm increments.
Maximum available length 6000 mm.

**Note:**
Aluminium profile for general constructions.

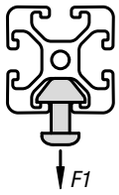


| Order No. | Slot width | Profile | Ix cm$^4$ | Iy cm$^4$ | Wx cm$^3$ | Wy cm$^3$ | Profile area cm$^2$ | F1 max. kN | Approx. weight kg/m |
|---|---|---|---|---|---|---|---|---|---|
| **10160-104560X****** | 10 | 45x60 | 37,55 | 22,66 | 12,52 | 10,07 | 11,14 | 12 | 3,01 |

# Aluminium profiles 45x90

Type B

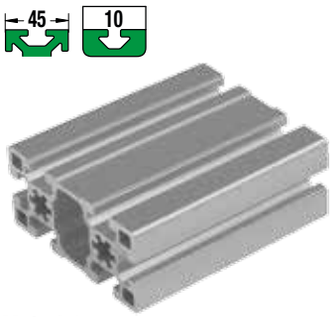

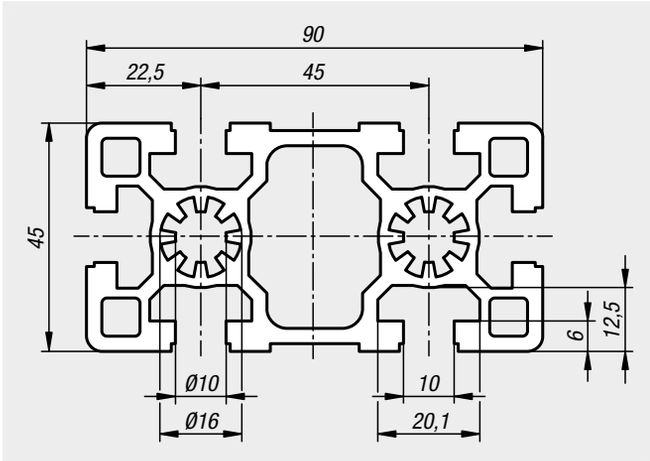


**Material:**
Aluminium EN AW-6063 T66 (AlMgSi 0.5 F25)

**Version:**
Artificially aged, natural colour anodized.

**Sample order:**
nlm 10160-104590X*
* Include length only in full mm increments.
Maximum available length 6000 mm.

**Note:**
Aluminium profile for general constructions.

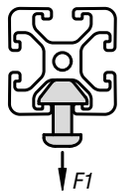


| Order No. | Slot width | Profile | Ix cm$^4$ | Iy cm$^4$ | Wx cm$^3$ | Wy cm$^3$ | Profile area cm$^2$ | F1 max. kN | Approx. weight kg/m |
|---|---|---|---|---|---|---|---|---|---|
| **10160-104590X****** | 10 | 45x90 | 124,05 | 32,25 | 27,57 | 14,33 | 15,24 | 12 | 4,12 |



# Aluminium profiles 90x90

Type B

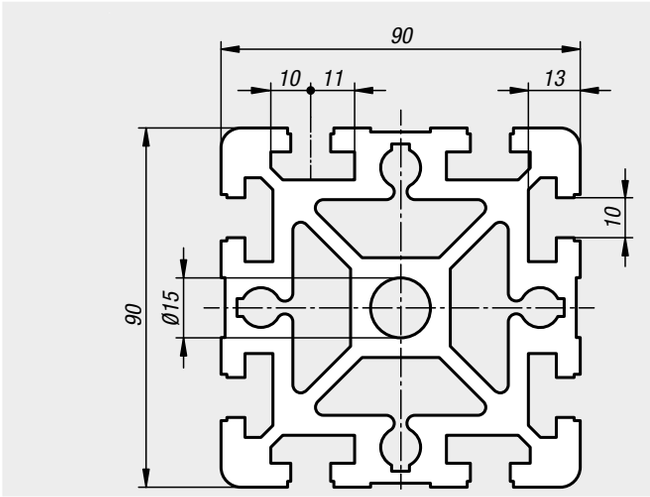


**Material:**
Aluminium EN AW-6063 T66 (AlMgSi 0.5 F25)

**Version:**
Artificially aged, natural colour anodized.

**Sample order:**
nlm 10160-109090X*
* Include length only in full mm increments.
Maximum available length 6000 mm.

**Note:**
Aluminium profile for general constructions.

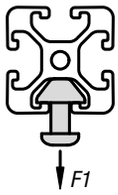


| Order No. | Slot width | Profile | Ix cm$^4$ | Iy cm$^4$ | Wx cm$^3$ | Wy cm$^3$ | Profile area cm$^2$ | F1 max. kN | Approx. weight kg/m |
|---|---|---|---|---|---|---|---|---|---|
| **10160-109090X****** | 10 | 90x90 | 301,96 | 301,96 | 67,07 | 67,07 | 38,93 | 18 | 10,51 |

# Notes

# 07000

## Connecting technology

# Slot nuts

twist-in Type I

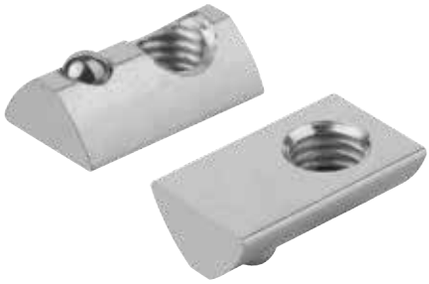

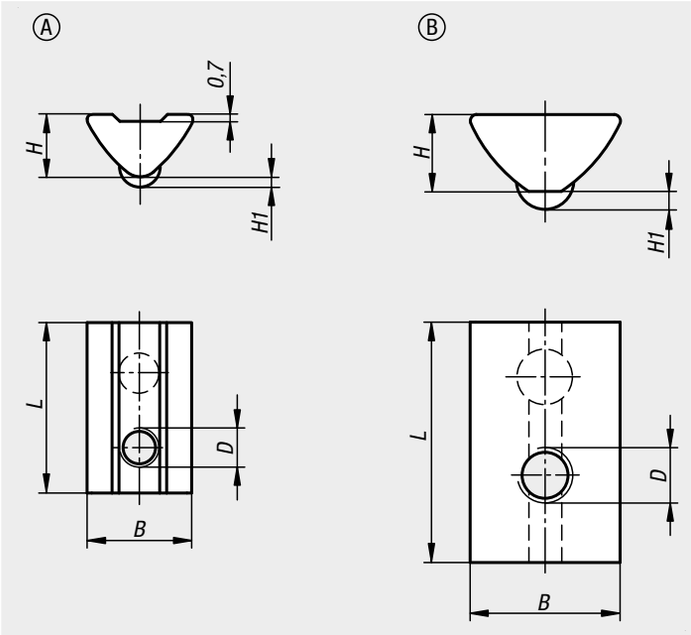


**Material:**
Steel.

**Version:**
galvanized.

**Sample order:**
nlm 07071-0604

**Note:**
The slot nut is twisted into the profile slot and so can be subsequently inserted into existing systems. The spring-loaded ball allows the nut to be fixated anywhere in the profile slot.

| Order No. | Type | Slot width | Form | D | B | H | H1 | L |
|---|---|---|---|---|---|---|---|---|
| **07071-0604** | I | 6 | A | M4 | 10,5 | 6,3 | 1 | 17 |
| **07071-0605** | I | 6 | A | M5 | 10,5 | 6,3 | 1 | 17 |
| **07071-0606** | I | 6 | A | M6 | 10,5 | 6,3 | 1 | 17 |
| **07071-0804** | I | 8 | B | M4 | 13,7 | 7 | 1,7 | 22 |
| **07071-0805** | I | 8 | B | M5 | 13,7 | 7 | 1,7 | 22 |
| **07071-0806** | I | 8 | B | M6 | 13,7 | 7 | 1,7 | 22 |
| **07071-0808** | I | 8 | B | M8 | 13,7 | 7 | 1,7 | 22 |

# Slot nuts

twist-in, keyed Type I

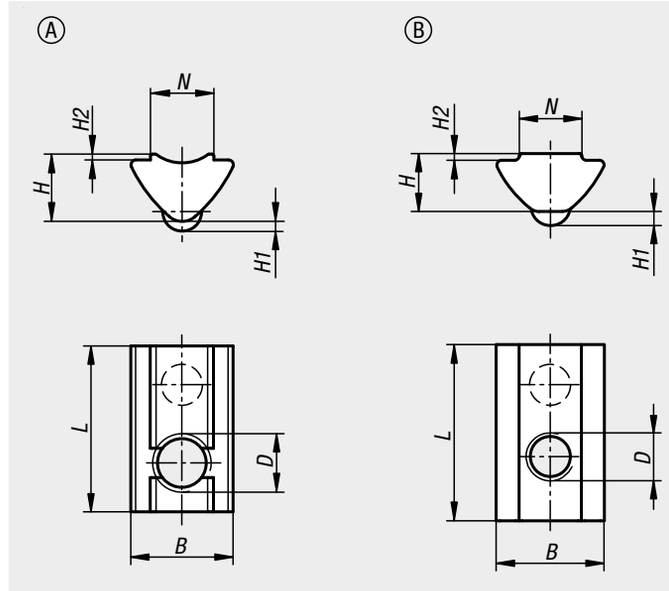


**Material:**
Steel.

**Version:**
galvanized.

**Sample order:**
nlm 07073-0604

**Note:**
The slot nut is twisted into the profile slot and so can be subsequently inserted into existing systems. The spring-loaded ball allows the nut to be fixated anywhere in the profile slot. The key centres the nut in the profile slot and keeps it neatly seated.

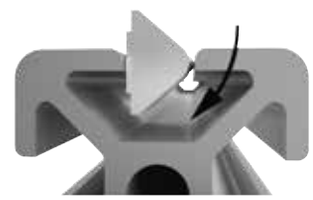

| Order No. | Type | Slot width | Form | D | N | B | H | H1 | H2 | L |
|---|---|---|---|---|---|---|---|---|---|---|
| **07073-0604** | I | 6 | A | M4 | 6,5 | 10,5 | 6,9 | 1 | 0,6 | 17 |
| **07073-0605** | I | 6 | A | M5 | 6,5 | 10,5 | 6,9 | 1 | 0,6 | 17 |
| **07073-0606** | I | 6 | A | M6 | 6,5 | 10,5 | 6,9 | 1 | 0,6 | 17 |
| **07073-0803** | I | 8 | B | M3 | 7,8 | 13,5 | 7,2 | 1,75 | 0,8 | 22 |
| **07073-0804** | I | 8 | B | M4 | 7,8 | 13,5 | 7,2 | 1,75 | 0,8 | 22 |
| **07073-0805** | I | 8 | B | M5 | 7,8 | 13,5 | 7,2 | 1,75 | 0,8 | 22 |
| **07073-0806** | I | 8 | B | M6 | 7,8 | 13,5 | 7,2 | 1,75 | 0,8 | 22 |
| **07073-0808** | I | 8 | B | M8 | 7,8 | 13,5 | 7,2 | 1,75 | 0,8 | 22 |

# Slot nuts

strong Type I

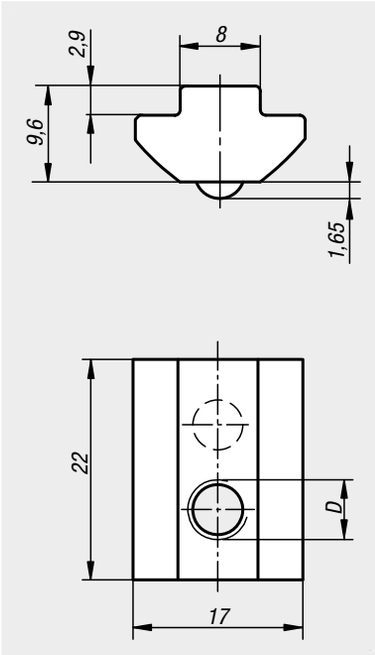


**Material:**
Steel.

**Version:**
galvanized.

**Sample order:**
nlm 07075-0804

**Note:**
Suitable for high load connections. Since the key passes to the slot form of the profile, forces are transferred to the profile. The total height allows more threads to be engaged. The slot key can only be inserted into the profile slot from the end. The spring-loaded ball allows the slot key to be fixated anywhere in the profile slot.

| Order No. | Type | Slot width | D |
|---|---|---|---|
| **07075-0804** | I | 8 | M4 |
| **07075-0805** | I | 8 | M5 |
| **07075-0806** | I | 8 | M6 |
| **07075-0808** | I | 8 | M8 |

# 07077

## Slot nuts

twist-in Type B

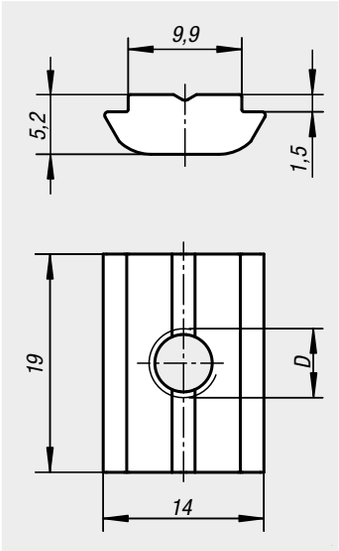


**Material:**
Steel.

**Version:**
galvanized.

**Sample order:**
nlm 07077-1004

**Note:**
The slot nut is twisted into the profile slot and so can be subsequently inserted into existing systems.

| Order No. | Type | Slot width | D |
|---|---|---|---|
| **07077-1004** | B | 10 | M4 |
| **07077-1005** | B | 10 | M5 |
| **07077-1006** | B | 10 | M6 |
| **07077-1008** | B | 10 | M8 |

# 07078

## Slot nuts

twist-in with spring Type B

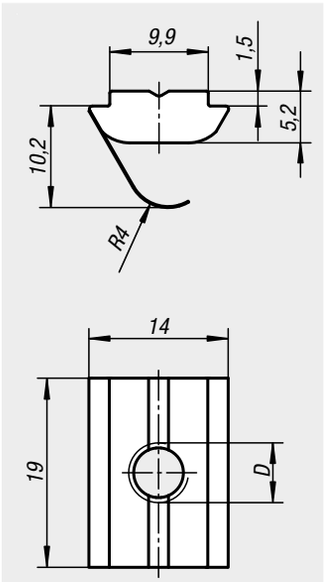


**Material:**
Steel.

**Version:**
galvanized.

**Sample order:**
nlm 07078-1004

**Note:**
The slot nut is twisted into the profile slot and so can be subsequently inserted into existing systems. The spring allows the nut to be fixated anywhere in the profile slot.

| Order No. | Type | Slot width | D |
|---|---|---|---|
| **07078-1004** | B | 10 | M4 |
| **07078-1005** | B | 10 | M5 |
| **07078-1006** | B | 10 | M6 |
| **07078-1008** | B | 10 | M8 |

# T-nuts

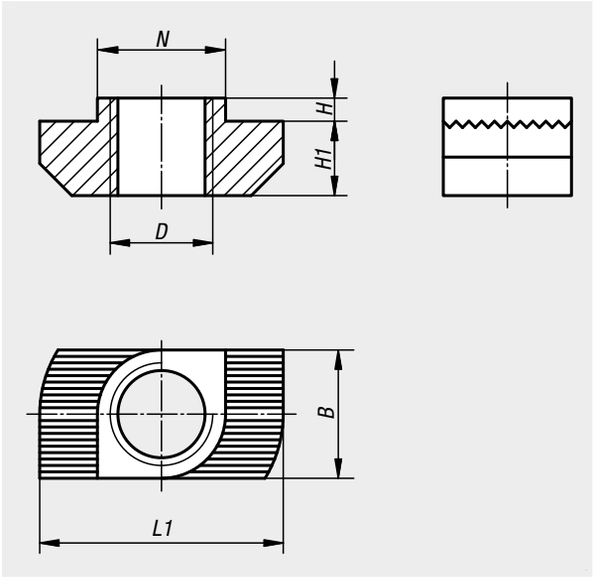


**Material:**
Steel.

**Version:**
galvanized.

**Sample order:**
nlm 07090-0804015

**Note:**
Universal fastening element. The T-nut is twisted into the profile slot and so can be subsequently inserted into existing systems. The serrations break through the anodized film and creates a secure, electrical conductive connection.

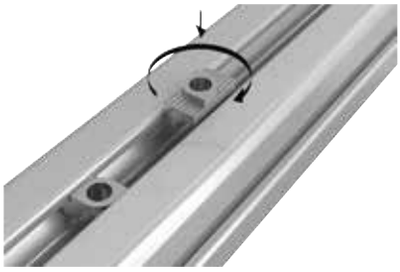

| Order No. | Type | Slot width | D | N | B | H | H1 | L1 |
|---|---|---|---|---|---|---|---|---|
| **07090-0804015** | B | 8 | M4 | 7,7 | 7,7 | 1,5 | 4,5 | 16 |
| **07090-0805015** | B | 8 | M5 | 7,7 | 7,7 | 1,5 | 4,5 | 16 |
| **07090-0806015** | B | 8 | M6 | 7,7 | 7,7 | 1,5 | 4,5 | 16 |
| **07090-1004030** | B | 10 | M4 | 9,7 | 9,7 | 3 | 5,8 | 19 |
| **07090-1005017** | - | 10 | M5 | 9,7 | 9,7 | 1,5 | 5,8 | 19 |
| **07090-1005030** | B | 10 | M5 | 9,7 | 9,7 | 3 | 5,8 | 19 |
| **07090-1006017** | - | 10 | M6 | 9,7 | 9,7 | 1,5 | 5,8 | 19 |
| **07090-1006030** | B | 10 | M6 | 9,7 | 9,7 | 3 | 5,8 | 19 |
| **07090-1008017** | - | 10 | M8 | 9,7 | 9,7 | 1,5 | 5,8 | 19 |
| **07090-1008030** | B | 10 | M8 | 9,7 | 9,7 | 3 | 5,8 | 19 |

# Hammer-head screws

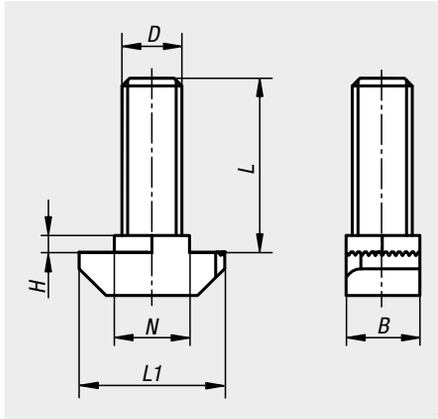


**Material:**
Steel.

**Version:**
galvanized.

**Sample order:**
nlm 07094-0806015X16

**Note:**
Universal fastening element. The hammer-headed screw is twisted into the profile slot and so can mounted into an existing systems at a later date. The serrations break through the anodized film and creates a secure, electrical conductive connection.

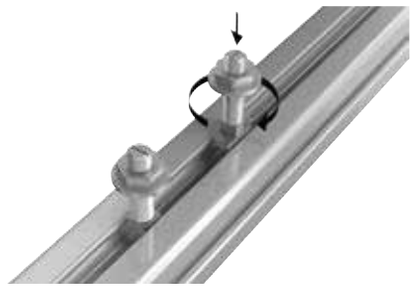

| Order No. | Type | Slot width | B | D | H | L | L1 | N |
|---|---|---|---|---|---|---|---|---|
| **07094-0806015X16** | B | 8 | 7,7 | M6 | 1,5 | 16 | 16 | 7,7 |
| **07094-0806015X20** | B | 8 | 7,7 | M6 | 1,5 | 20 | 16 | 7,7 |
| **07094-0806015X25** | B | 8 | 7,7 | M6 | 1,5 | 25 | 16 | 7,7 |
| **07094-1008030X20** | B | 10 | 9,7 | M8 | 3 | 20 | 19 | 9,7 |
| **07094-1008030X25** | B | 10 | 9,7 | M8 | 3 | 25 | 19 | 9,7 |
| **07094-1008030X30** | B | 10 | 9,7 | M8 | 3 | 30 | 19 | 9,7 |
| **07094-1008030X40** | B | 10 | 9,7 | M8 | 3 | 40 | 19 | 9,7 |
| **07094-1008030X60** | B | 10 | 9,7 | M8 | 3 | 60 | 19 | 9,7 |

# Flange nuts

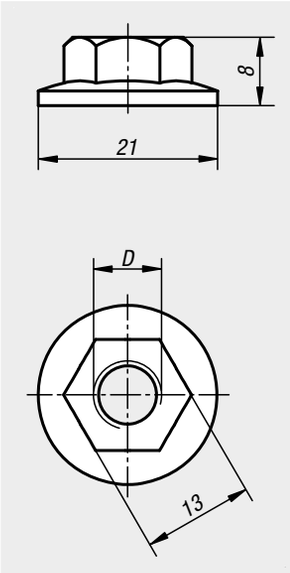


**Material:**
Steel.

**Version:**
galvanized.

**Sample order:**
nlm 07218-08

**Note:**
Nut with a large collar. Ideal together with a hammer-head screw.

| Order No. | Type | Slot width | D |
|---|---|---|---|
| **07218-08** | B | 10 | M8 |

# 10000

## Connectors

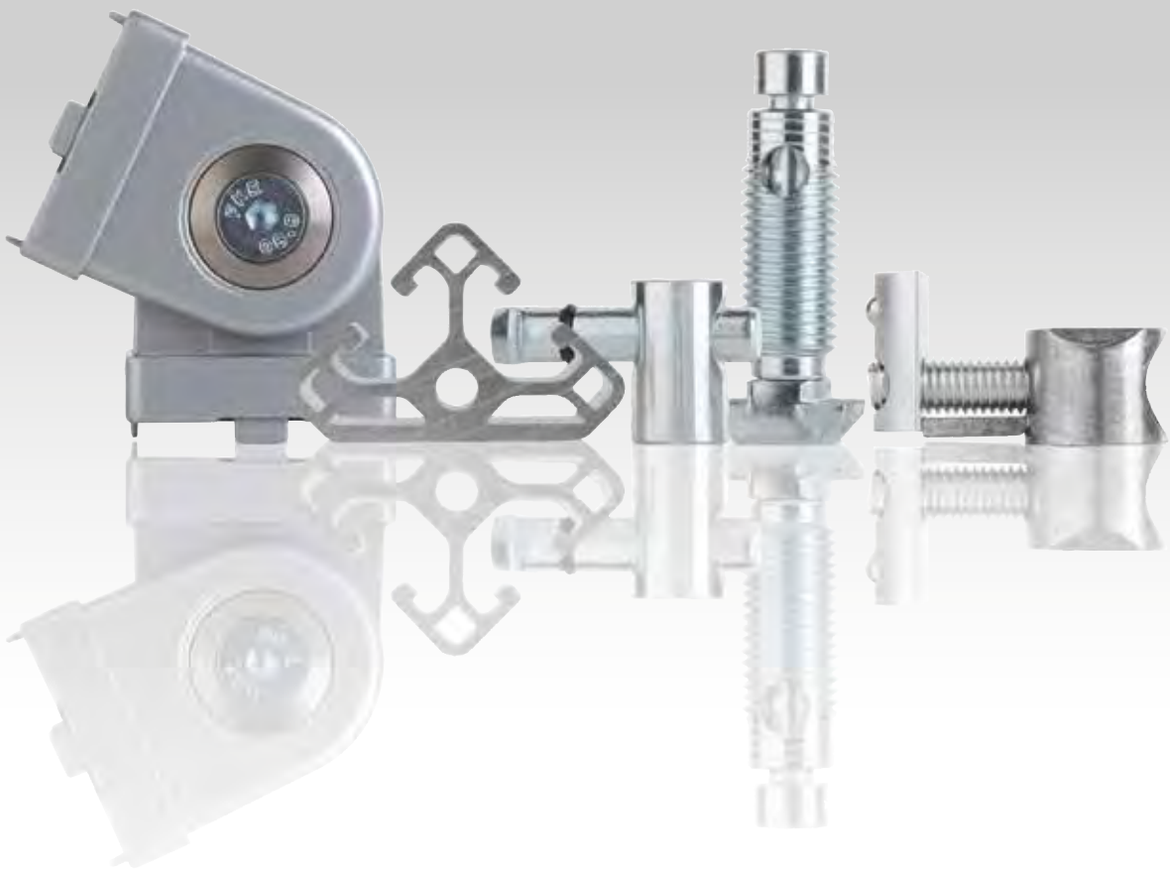

# Connecting sets standard

Type I

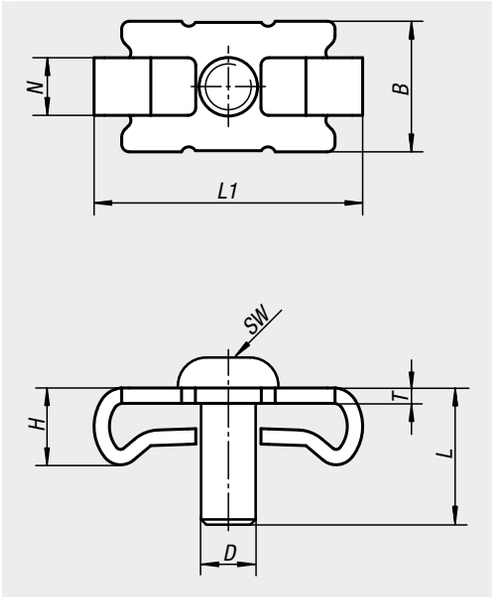


**Material:**
Steel.

**Version:**
galvanized.

**Sample order:**
nlm 10200-06

**Note:**
The connecting sets are used for connecting two aluminium profiles at right angles. The connection is non-rotating. For larger profiles several connecting sets can be mounted on the end for greater strength

Low workload. Cut a thread in the end face core hole. Drill a through hole for tightening the screw in the opposing profile.

1.

2.

3.

| Order No. | Type | Slot width | D | B | H | L | L1 | N | T | SW |
|---|---|---|---|---|---|---|---|---|---|---|
| **10200-06** | I | 6 | M6 | 13 | 7,3 | 14 | 27,5 | 6 | 2 | 4 |
| **10200-08** | I | 8 | M8 | 17 | 9,5 | 20 | 35 | 8 | 2 | 5 |

# Connecting sets universal

Type I

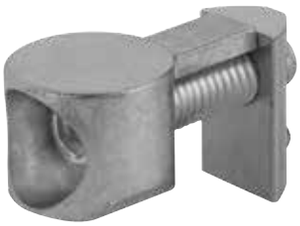

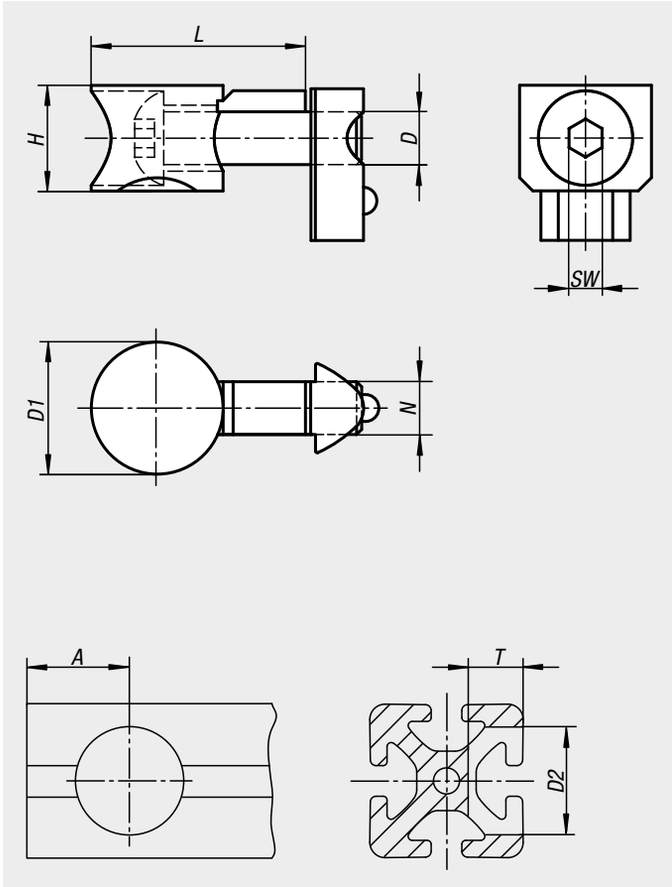


**Material:**
Connector die-cast zinc.
Screw and slot nuts steel.

**Version:**
galvanized.

**Sample order:**
nlm 10202-06

**Note:**
The connecting sets are used for connecting two aluminium profiles at right angles. They allow a free positioning of profiles. The connection is non-rotating (the rotation lock can be broken off). For larger profiles several connecting sets can be mounted on the end for greater strength. Retrofitting into existing constructions is possible.

Low workload. The connecting set requires only one hole drilled in one end.

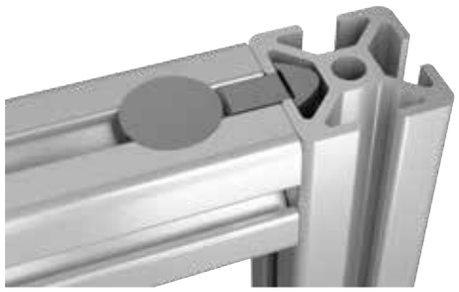

| Order No. | Type | Slot width | D | D1 | H | L | N | SW | A | D2 | T |
|---|---|---|---|---|---|---|---|---|---|---|---|
| **10202-06** | I | 6 | M6 | 16 | 12,5 | 25,2 | 6,2 | 4 | 15 | 16 | 12,7 |
| **10202-08** | I | 8 | M8 | 20 | 16 | 33,5 | 8 | 5 | 20 | 20 | 16 |

# Connecting sets central

## Type I

**Material:**
Steel.

**Version:**
galvanized.

**Sample order:**
nlm 10204-0800

**Note:**
The connecting sets are used to connect two aluminium profiles at right angles. They allow free position of the profiles. The profile slots positioned at right-angles to each other remain free. Panel elements can be positioned in the profile grooves without additional machining.

Due to the reduced clamping force and ommited rotation locks, these connecting sets should only be used in combination with panel elements and lightly loaded constructions.

Low workload. To assemble a hole must be drilled into one of the profiles and the core hole must be drilled out.

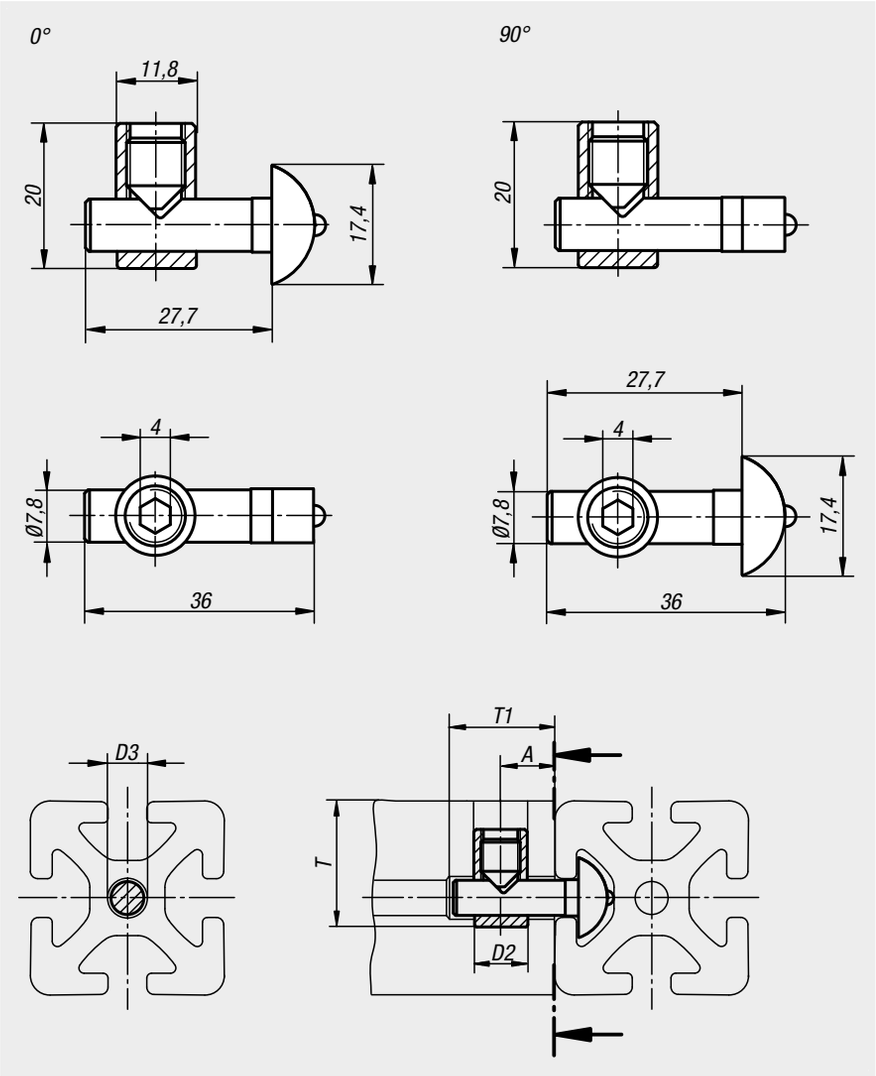


0°

90°

| Order No. | Type | Slot width | Version | A | D2 | D3 | T | T1 |
|---|---|---|---|---|---|---|---|---|
| **10204-0800** | I | 8 | 0° | 15 | 12 | 8 | 28 | 28 |
| **10204-0890** | I | 8 | 90° | 15 | 12 | 8 | 28 | 28 |

# Connecting sets central

Type B

**Material:**
Steel.

**Version:**
galvanized.

**Sample order:**
nlm 10205-1000

**Note:**
The connecting sets are used to connect two aluminium profiles at right angles. They allow free position of the profiles. The profile slots positioned at right-angles to each other remain free. Panel elements can be positioned in the profile slots without additional machining.

Due to the reduced clamping force and omitted rotation locks, these connecting sets should only be used in combination with panel elements and lightly loaded constructions.

Low workload. To assemble a hole must be drilled into one of the profiles. The D2 hole can also be drilled through.

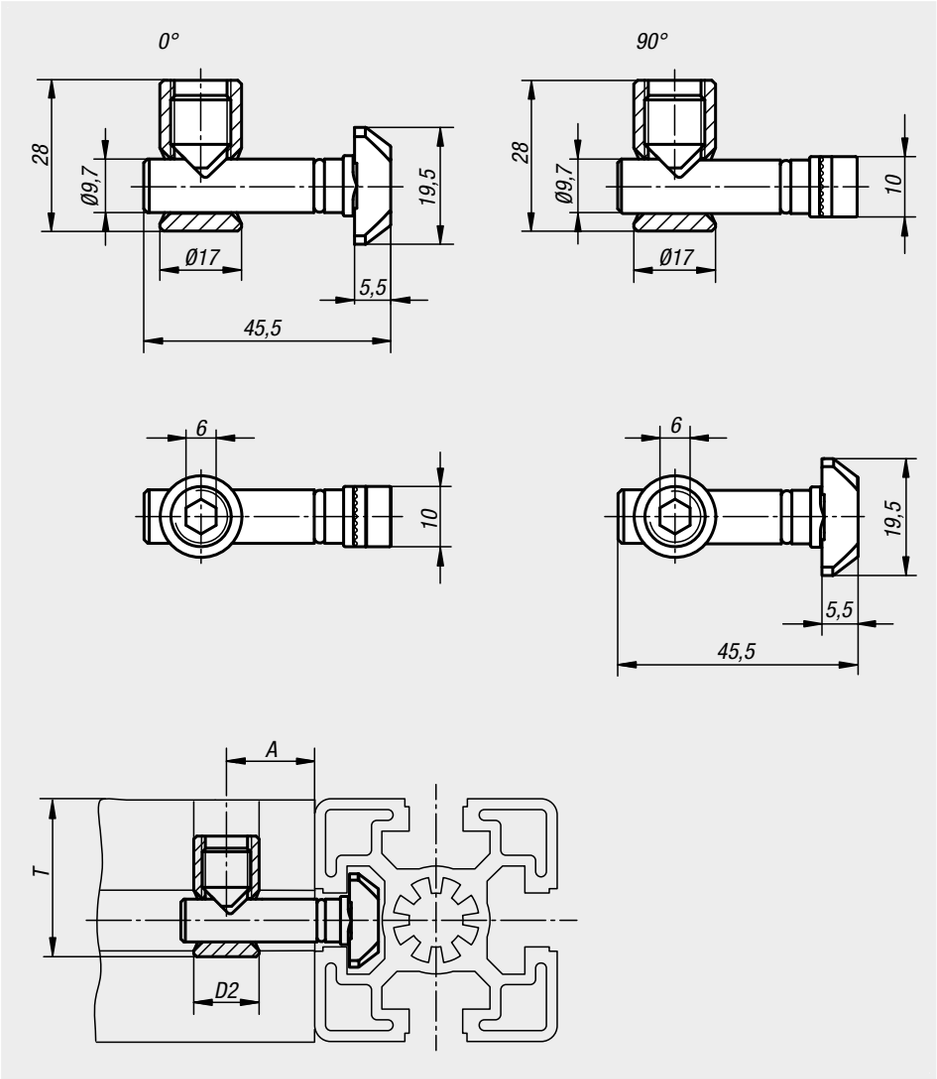


0°

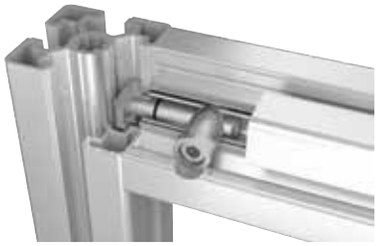

90°

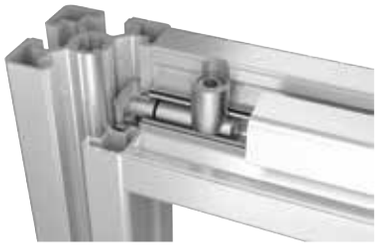

| Order No. | Type | Slot width | Version | A | D2 | T for profile 40 | T for profile 45 | T for profile 50 | T for profile 60 |
|---|---|---|---|---|---|---|---|---|---|
| **10205-1000** | B | 10 | 0° | 22,5 | 17 | 31 | 34 | 36 | 41 |
| **10205-1090** | B | 10 | 90° | 22,5 | 17 | 31 | 34 | 36 | 41 |

# Connecting sets central

Type B

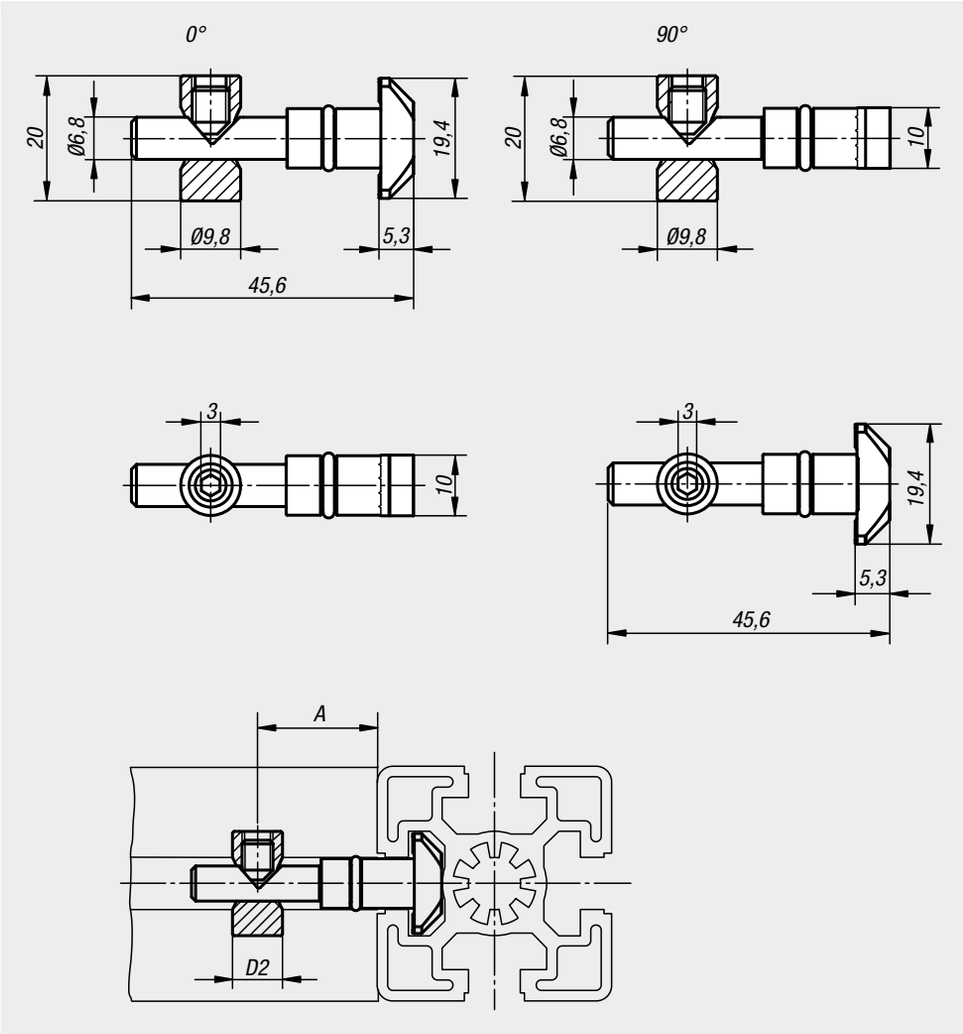


**Material:**
Steel.

**Version:**
galvanized.

**Sample order:**
nlm 10206-1000

**Note:**
The connecting sets are used to connect two aluminium profiles at right angles. They allow free position of the profiles. The profile slots positioned at right-angles to each other remain free. Panel elements can be positioned in the profile slots without additional machining.

Due to the reduced clamping force and omitted rotation locks, these connecting sets should only be used in combination with panel elements and lightly loaded constructions.

Low workload. To assemble a hole must be drilled into one of the profiles. Due to the reduced pin diameter the slot is not damaged and can be completely covered with a cover profile.

0°

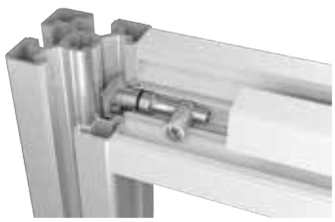

90°

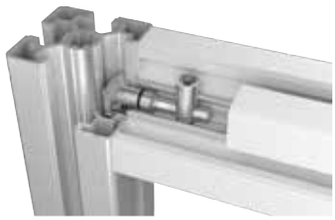

| Order No. | Type | Slot width | Version | A | D2 |
|---|---|---|---|---|---|
| **10206-1000** | B | 10 | 0° | 22,5 | 9,8 |
| **10206-1090** | B | 10 | 90° | 22,5 | 9,8 |

# Connecting sets automatic

Type I

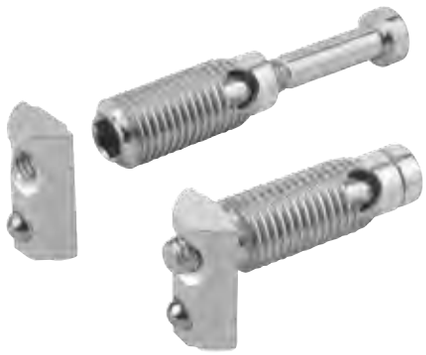

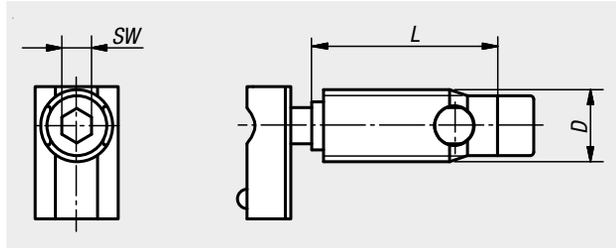


**Material:**
Steel.

**Version:**
galvanized.

**Sample order:**
nlm 10210-06

**Note:**
The connecting sets are used to connect two aluminium profiles at right angles. They allow free position of the profiles.

No profile machining is necessary. The connector is screwed into the profile slot from the front (left-hand thread). The connector has a self-tapping thread. The use of lubricants is recommended.

Connecting sets automatic should always be used opposite each other in pairs.

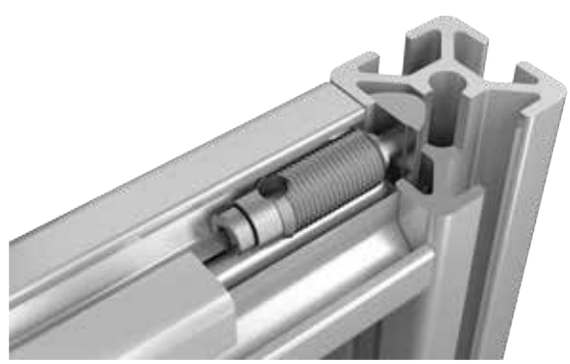

| Order No. | Type | Slot width | D | L | SW |
|---|---|---|---|---|---|
| **10210-06** | I | 6 | 10 | 27 | 4 |
| **10210-08** | I | 8 | 12 | 31 | 5 |

# Connecting sets automatic

Type B

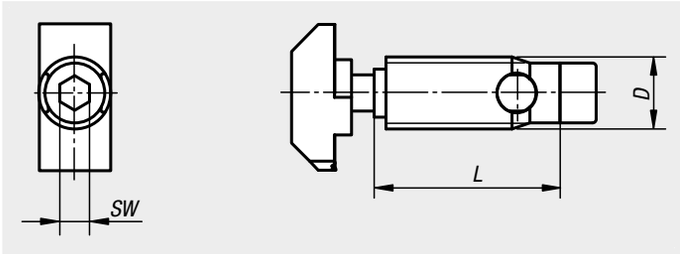


**Material:**
Steel.

**Version:**
galvanized.

**Sample order:**
nlm 10212-1012

**Note:**
The connecting sets are used to connect two aluminium profiles at right angles. They allow free position of the profiles.

No profile machining is necessary. The connector is screwed into the profile slot from the front (left-hand thread). The connector has a self-tapping thread. The use of lubricants is recommended.

Connecting sets automatic should always be used opposite each other in pairs.

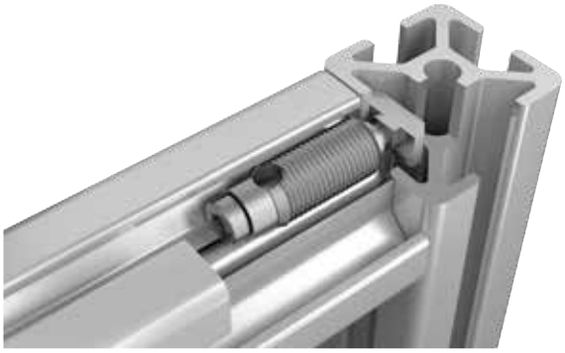

| Order No. | Type | Slot width | D | L | SW |
|---|---|---|---|---|---|
| **10212-1012** | B | 10 | 12 | 35 | 5 |
| **10212-1013** | B | 10 leicht | 13 | 35 | 5 |

# Pin connector sets

Type B

**Material:**
Pins, screws and T-nuts steel.
Locating pin und end caps polyamide, fibreglass reinforced.

**Version:**
Pins, screws and T-nuts galvanized.
Locating pin and end caps black.

**Sample order:**
nlm 10215-1040

**Note:**
The connecting sets are used for connecting two aluminium profiles at right angles. They allow free positioning of the profiles. Suitable for high loads and absorbing torsional forces.

Low workload. The connecting set only requires one 17 mm hole drilled one side.

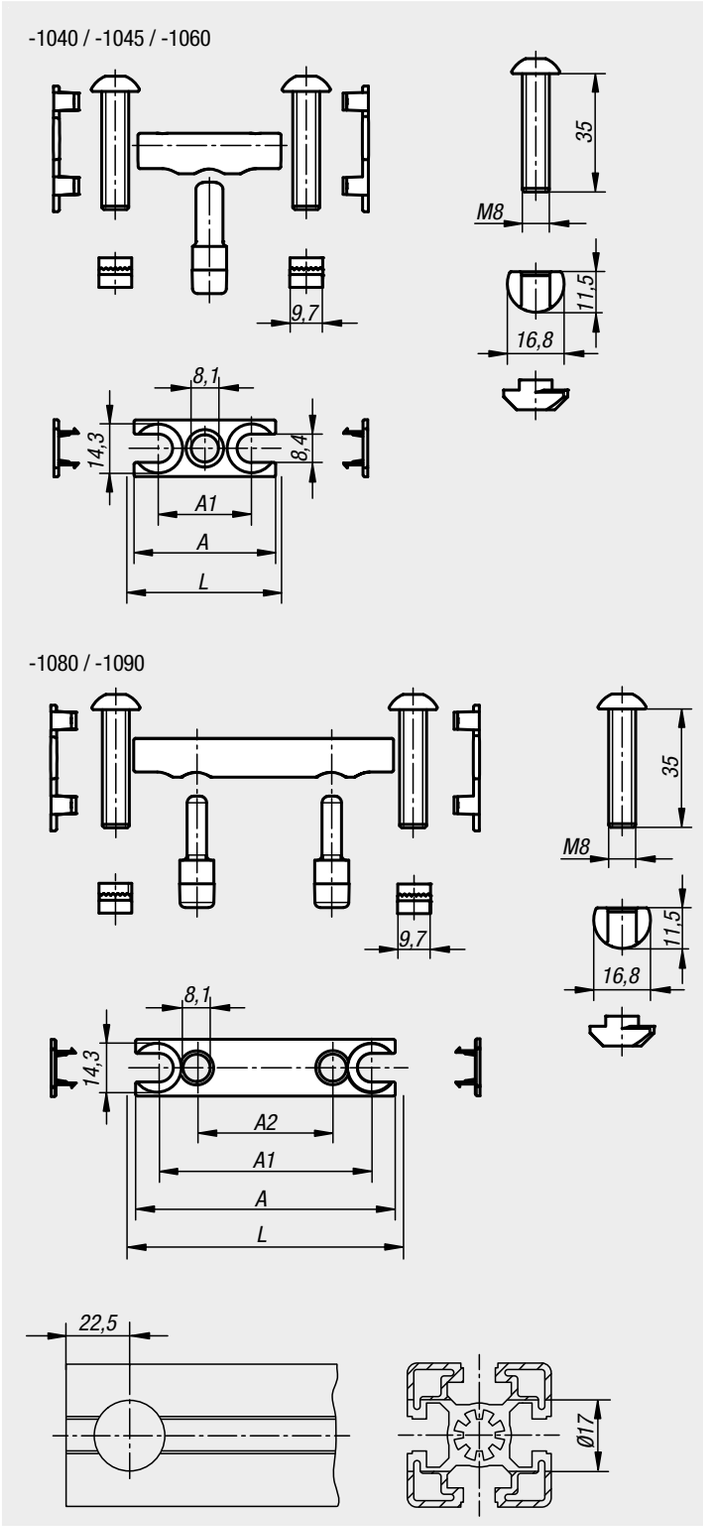


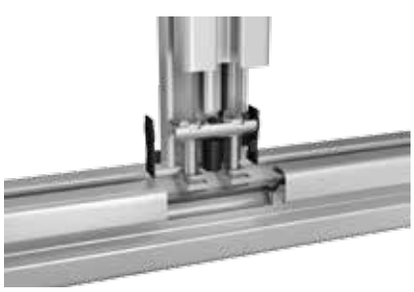

| Order No. | Type | Slot width | A | A1 | A2 | L |
|---|---|---|---|---|---|---|
| **10215-1040** | B | 10 | 37 | 23 | - | 40 |
| **10215-1045** | B | 10 | 42 | 28 | - | 45 |
| **10215-1060** | B | 10 | 57 | 43 | - | 60 |
| **10215-1080** | B | 10 | 77 | 63 | 40 | 80 |
| **10215-1090** | B | 10 | 87 | 73 | 45 | 90 |

# Cube connector sets

Type B

**Material:**
Cube die-cast aluminium.
Screws steel.
End caps polyamide.

**Version:**
Aluminium bright.
Screws with self-tapping thread.
End cap black.

**Sample order:**
nlm 10220-102

**Note:**
The cube connector can be used to connect two or three profiles to each other by the end faces. The cube connectors have guide lugs that ensure a perfect and secure installation. Fastening to the profile is carried out by self-tapping screws. The open holes can be closed off with the end caps.

The profile slots positioned at right-angles to each other remain free. Panel elements can be positioned in the profile slots without additional machining.

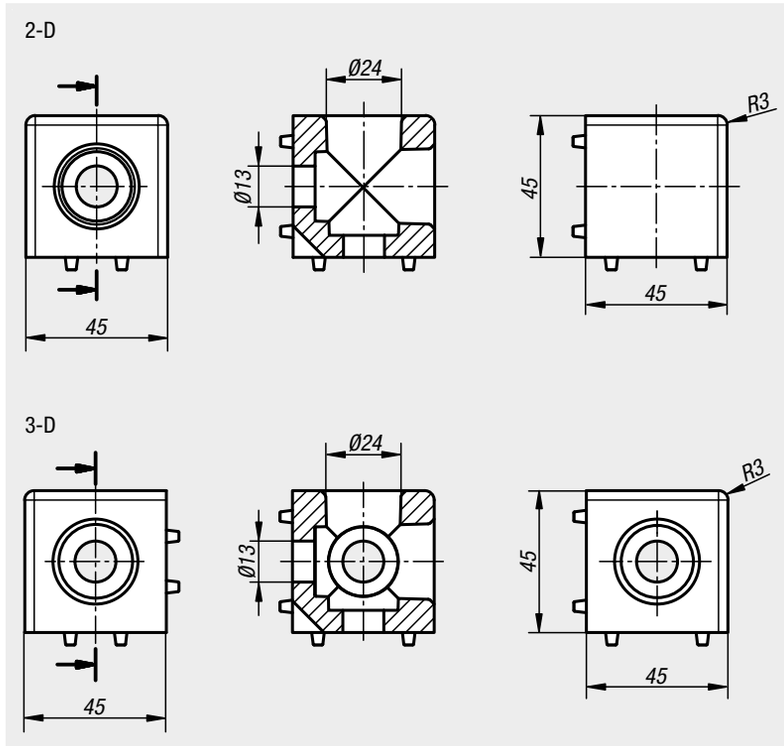

| Order No. | Type | Slot width | Version |
|---|---|---|---|
| **10220-102** | B | 10 | 2-D |
| **10220-103** | B | 10 | 3-D |

# Central screws

Type B

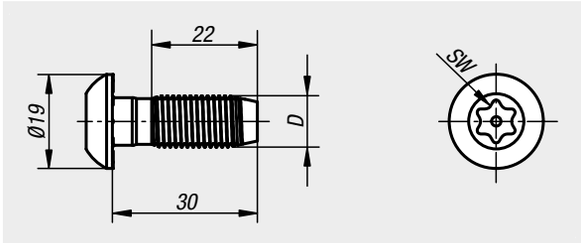


**Material:**
Steel.

**Version:**
galvanized.

**Sample order:**
nlm 10228-1012

**Note:**
Self-tapping screw for end face core hole. Ideal for fastenings without an angle or additional connectors not exposed to high loads.

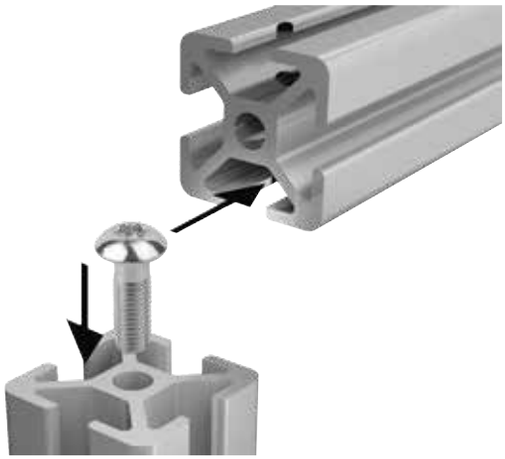

| Order No. | Type | Slot width | D | SW |
|---|---|---|---|---|
| **10228-1012** | B | 10 | S12 | T50 |

# Butt connector sets automatic

Type I

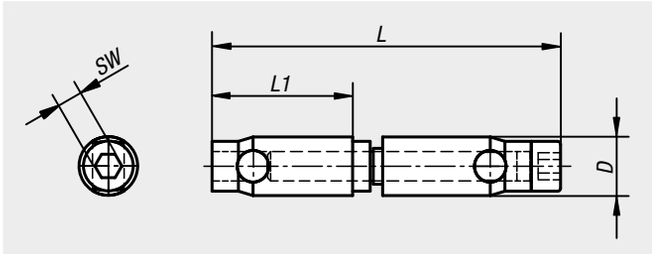


**Material:**
Steel.

**Version:**
galvanized.

**Sample order:**
nlm 10230-06

**Note:**
The connecting sets are used to connect two aluminum profiles of the same series from the front.

No machining of the profile is necessary. The connector is screwed into the profile slot from the front (connector with through hole left-hand thread. Connector with internal thread right-hand thread). The connector has a self-tapping thread. The use of lubricants is recommended.

Automatic connecting sets should always be used in pairs. More pairs are required for large profiles and loads.

| Order No. | Type | Slot width | D | L | L1 | SW |
|---|---|---|---|---|---|---|
| **10230-06** | I | 6 | 10 | 60 | 24 | 4 |
| **10230-08** | I | 8 | 12 | 69 | 27 | 5 |

# Straps

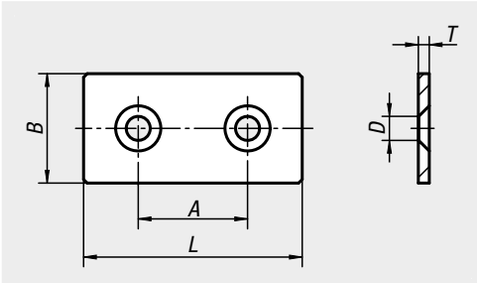


**Material:**
Steel.

**Version:**
black powder-coated.

**Sample order:**
nlm 10240-061

**Note:**
Universal fastening element for a rigid connection and linkage of profiles, panel elements or lightweight shelving.

| Order No. | Type | Slot width | A | B | D for screw | L | T |
|---|---|---|---|---|---|---|---|
| **10240-061** | I | 6 | 30 | 30 | M6 | 60 | 3 |
| **10240-081** | B & I | 8/10 | 40 | 40 | M8 | 80 | 5 |
| **10240-101** | B | 8/10 | 45 | 45 | M8 | 90 | 5 |

# Angles

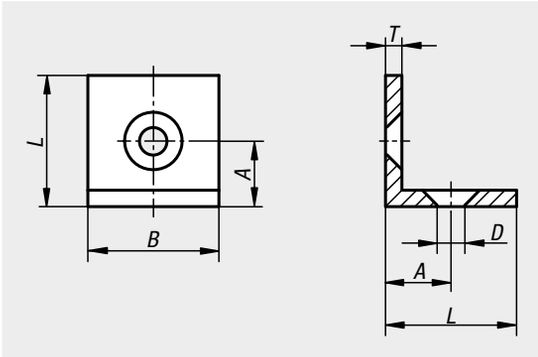


**Material:**
Steel.

**Version:**
black powder-coated.

**Sample order:**
nlm 10242-061

**Note:**
Universal fastening element for a rigid connection and linkage of profiles, panel elements or lightweight shelving.

| Order No. | Type | Slot width | A | B | D for screw | L | T |
|---|---|---|---|---|---|---|---|
| **10242-061** | I | 6 | 15 | 30 | M6 | 30 | 3 |
| **10242-081** | I | 8/10 | 20 | 40 | M8 | 40 | 5 |

# Fastening sets

for straps und angles

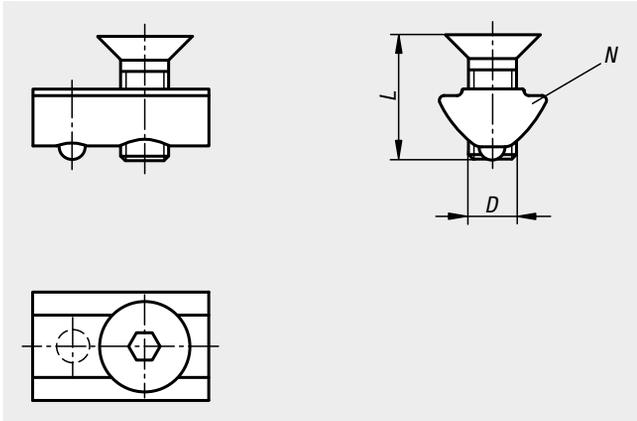


**Material:**
Steel.

**Version:**
galvanized.

**Sample order:**
nlm 10244-06

**Note:**
Consists of two DIN 7991 countersunk screws and two slot nuts.

| Order No. | Type | Slot width | Version | D | L |
|---|---|---|---|---|---|
| **10244-06** | I | 6 | Slot key without step | M6 | 10 |
| **10244-08** | I | 8 | Slot key with step | M8 | 14 |

# Angle sets

Type I

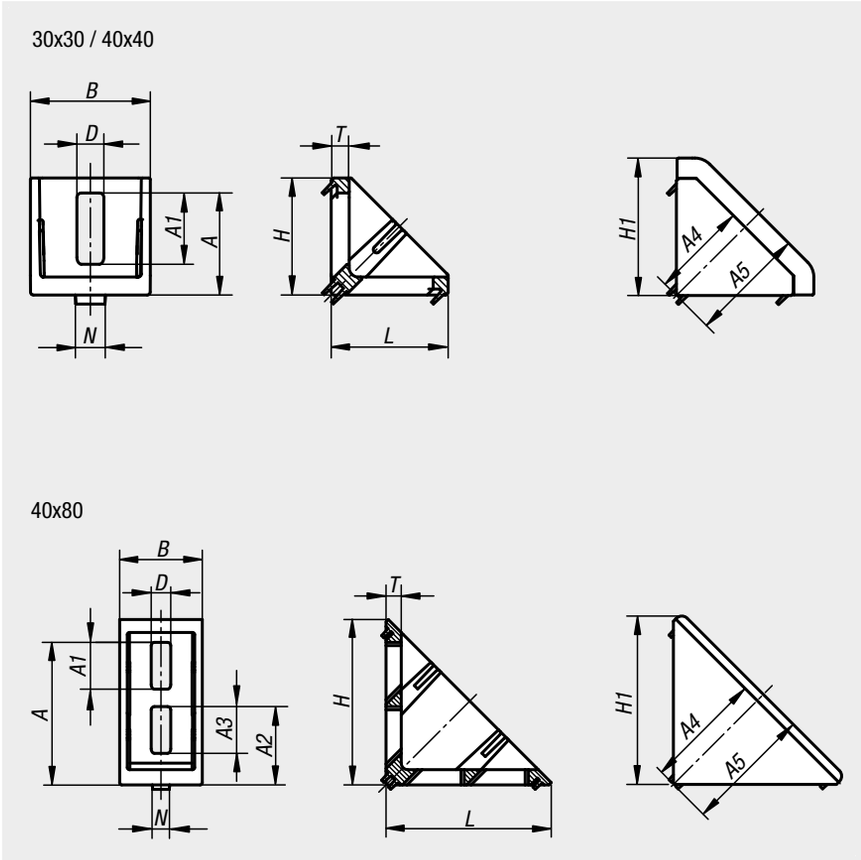


**Material:**
Angle die-cast zinc.
Screws and slot nuts steel.
End cap polyamide, fibreglass reinforced.

**Version:**
Angle painted aluminium tone.
Screws and slot nuts galvanized.
End cap black.

**Sample order:**
nlm 10250-063030

**Note:**
Suitable for reinforcing profile constructions and for frictional connection of profiles with each other without machining. Can also be used as fastening element (e.g. bracket) for any components.
The angles have centring lugs for accurate and twist-proof mounting. The centring lugs can be removed if necessary by breaking off i.e. for mounting plates. The open side can be closed off with the end cap.

| Order No. | Type | Slot width | Version | A | A1 | A2 | A3 | A4 | A5 | B | D | H | H1 | L | N | T |
|---|---|---|---|---|---|---|---|---|---|---|---|---|---|---|---|---|
| **10250-063030** | I | 6 | 30x30 | 22,5 | 11 | - | - | 23 | 27 | 28 | 6,5 | 28 | 32 | 28 | 6 | 4 |
| **10250-084040** | I | 8 | 40x40 | 34 | 24 | - | - | 32,5 | 39 | 40 | 9 | 39 | 46 | 39 | 8 | 6 |
| **10250-088080** | I | 8 | 40x80 | 65,5 | 21,5 | 36 | 21,5 | 54,5 | 58,5 | 38 | 9 | 76 | 78 | 76 | 8 | 7 |

# Angle sets

## Type B

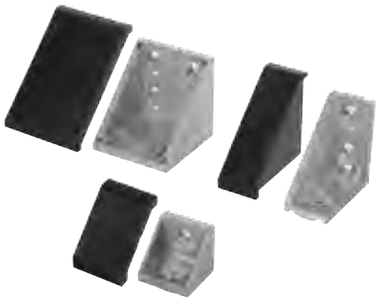

**Material:**
Angle die-cast aluminium.

Screws and slot nuts steel.
End cap polyamide, fibreglass reinforced.

**Version:**
Angle bright.
Screws and slot nuts galvanized.
End cap black.

**Sample order:**
nlm 10252-104040

**Note:**
Suitable for reinforcing profile constructions and for frictional connection of profiles with each other without machining. Can also be used as fastening element (e.g. bracket) for any components.
The angles have centring lugs for accurate and twist-proof mounting.
The centring lugs can be removed if necessary by breaking off i.e. for mounting plates. The open side can be closed off with the end cap.

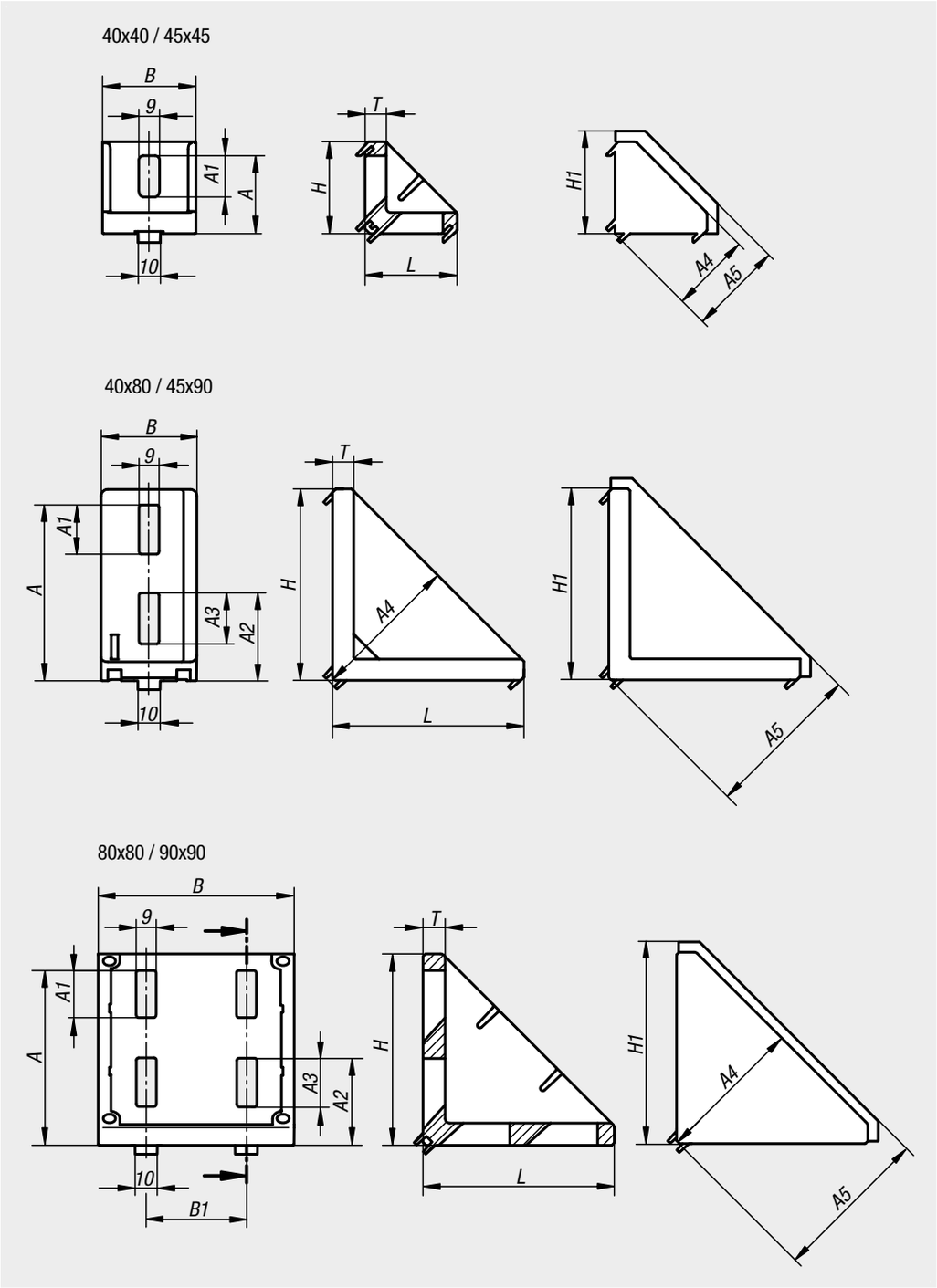


| Order No. | Type | Slot width | Version | A | A1 | A2 | A3 | A4 | A5 | B | B1 | H | H1 | L | T |
|---|---|---|---|---|---|---|---|---|---|---|---|---|---|---|---|
| **10252-104040** | B | 10 | 40x40 | 29,5 | 20,5 | - | - | 29,5 | 36,5 | 38 | - | 36 | 41,5 | 36 | 5,5 |
| **10252-104545** | B | 10 | 45x45 | 35 | 18,5 | - | - | 35 | 44,5 | 42 | - | 41 | 50,5 | 41 | 9,5 |
| **10252-104080** | B | 10 | 40x80 | 68 | 20 | 35 | 23 | 59 | 64 | 38 | - | 76 | 80 | 76 | 8,5 |
| **10252-104590** | B | 10 | 45x90 | 79 | 22 | 39,5 | 23 | 67 | 72 | 43 | - | 86 | 90 | 86 | 9,5 |
| **10252-108080** | B | 10 | 80x80 | 68,5 | 20 | 35 | 20 | 58,5 | 65 | 74 | 40 | 76 | 82,5 | 76 | 8 |
| **10252-109090** | B | 10 | 90x90 | 78,5 | 21 | 39 | 22 | 67 | 75 | 88 | 45 | 86 | 94,5 | 86 | 10 |

# Angle elements T1

Type I

**Material:**
Aluminium.

**Version:**
anodized.

**Sample order:**
nlm 10260-063030

**Note:**
Angle element for fastening a profile at a 45° angle and for making struts or ties.
The angle element can be fastened with a universal connector set (remove rotation lock) and with ISO 7380 round-head screws.

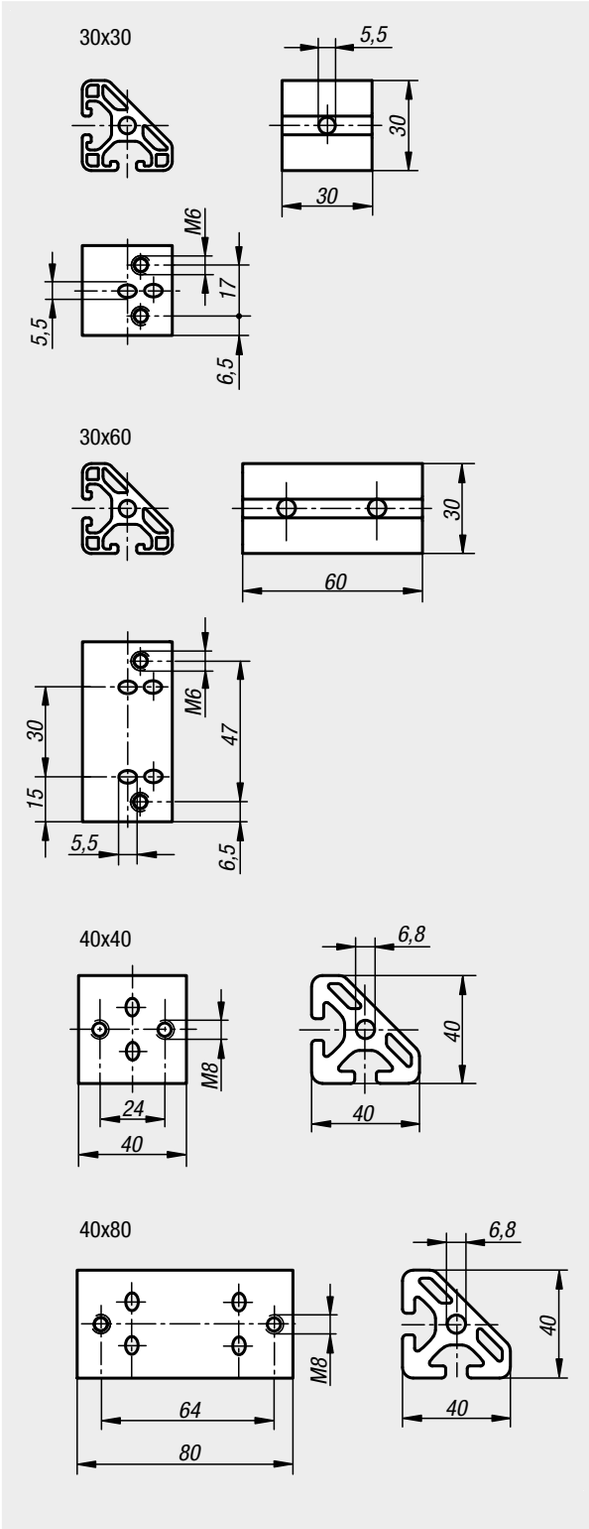

| Order No. | Type | Slot width | Version |
|---|---|---|---|
| **10260-063030** | I | 6 | 30x30 |
| **10260-063060** | I | 6 | 30x60 |
| **10260-084040** | I | 8 | 40x40 |
| **10260-084080** | I | 8 | 40x80 |

# Angle elements T2

Type I

**Material:**
Aluminium.

**Version:**
anodized.

**Sample order:**
nlm 10261-063030

**Note:**
Angle element for fastening two profiles at a 45° angle and for making struts or ties.
The angle element can be fastened with universal connector sets and ISO 7380 round-head screws.

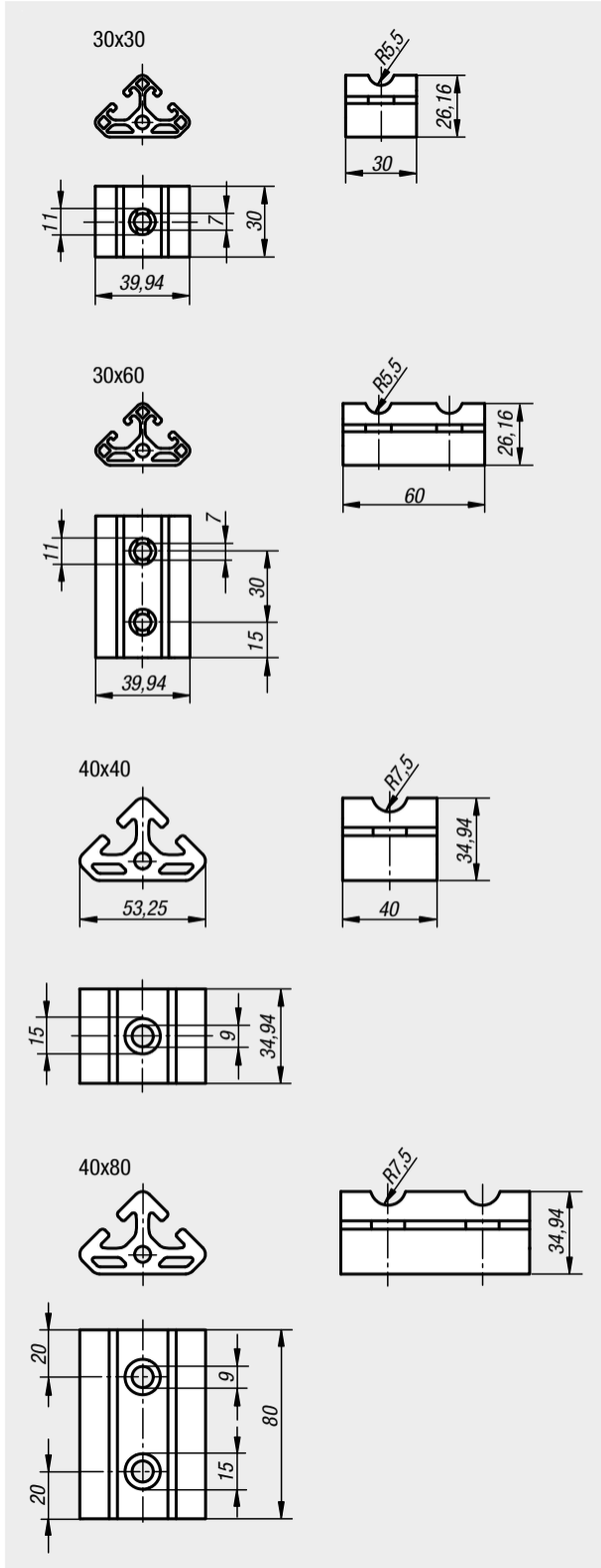

| Order No. | Type | Slot width | Version |
|---|---|---|---|
| **10261-063030** | I | 6 | 30x30 |
| **10261-063060** | I | 6 | 30x60 |
| **10261-084040** | I | 8 | 40x40 |
| **10261-084080** | I | 8 | 40x80 |

# Clamping angles

Type I

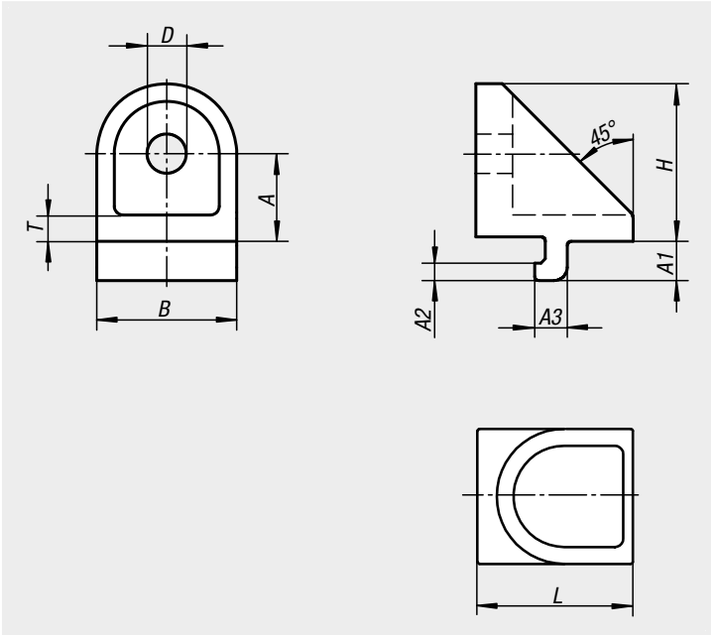


**Material:**
Clamping angle die-cast zinc.

**Version:**
Clamping angle painted aluminium tone.

**Sample order:**
nlm 10265-06

**Note:**
The clamping angles are used for connecting two profiles of the same series that have contact on the side faces and cross at any angle.

Loosening the screw releases both clamps allowing free rotation and sliding along the slots.

The clamping angles are generally used in pairs or in combination with a joint angle.

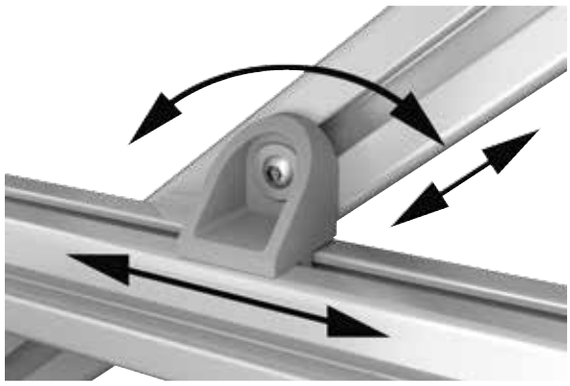

| Order No. | Type | Slot width | A | A1 | A2 | A3 | B | D | H | L | T |
|---|---|---|---|---|---|---|---|---|---|---|---|
| **10265-06** | I | 6 | 15 | 6,3 | 3 | 5,7 | 24 | 7 | 27 | 27 | 5 |
| **10265-08** | I | 8 | 20 | 9 | 4 | 7,5 | 32 | 9 | 36 | 36 | 6 |

# Joint angles

## Type I

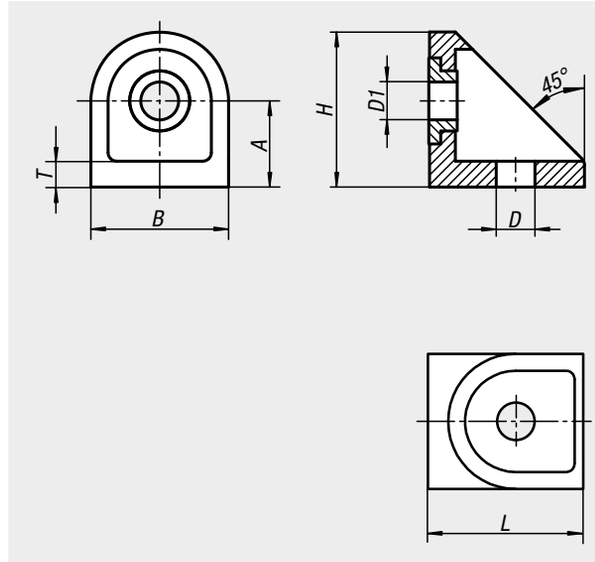


**Material:**
Joint angle die-cast zinc.
Pivot bush steel.

**Version:**
Joint angle painted aluminium tone.
Pivot bush galvanized.

**Sample order:**
nlm 10266-06

**Note:**
The joint angles are used for connecting two profiles of the same series that have contact on the side faces and cross at any angle.

The joint angle acts as a fixed pivot point for the crossed profiles. When the screw is tightened the profile can still be freely rotated around the pivot bush.

The joint angles are generally used in combination with a clamping angle.

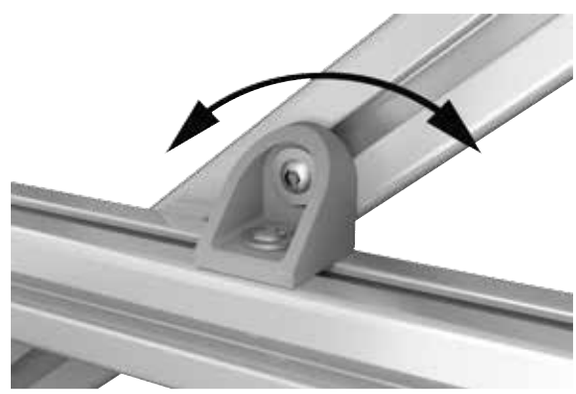

| Order No. | Type | Slot width | A | B | D | D1 | H | L | T |
|---|---|---|---|---|---|---|---|---|---|
| **10266-06** | I | 6 | 15 | 24 | 7 | 6,5 | 27 | 27 | 5 |
| **10266-08** | I | 8 | 20 | 32 | 9 | 8,8 | 35,2 | 36 | 5,5 |

# Joints

## Type B and Type I

**Material:**
Joint die-cast zinc.
Fasteners die-cast zinc.
Spacer rings stainless steel.
Tapped bush and countersunk screws steel.

**Version:**
Joint painted aluminium tone.
Fasteners galvanized.
Spacer rings bright.
Tapped bushes and countersunk screws galvanized.

**Sample order:**
nlm 10270-063030

**Note:**
Joints for connecting two profiles at any angle.
The adjustment range is 0° to 180°. The joint can also be used as a heavy hinge.

When the spacer rings are inserted, the joint can move freely. When these are removed, the joint can be used as a rigid angle element. The joints are particularly suitable for use as adjustable brackets, swivel arms or similar applications.

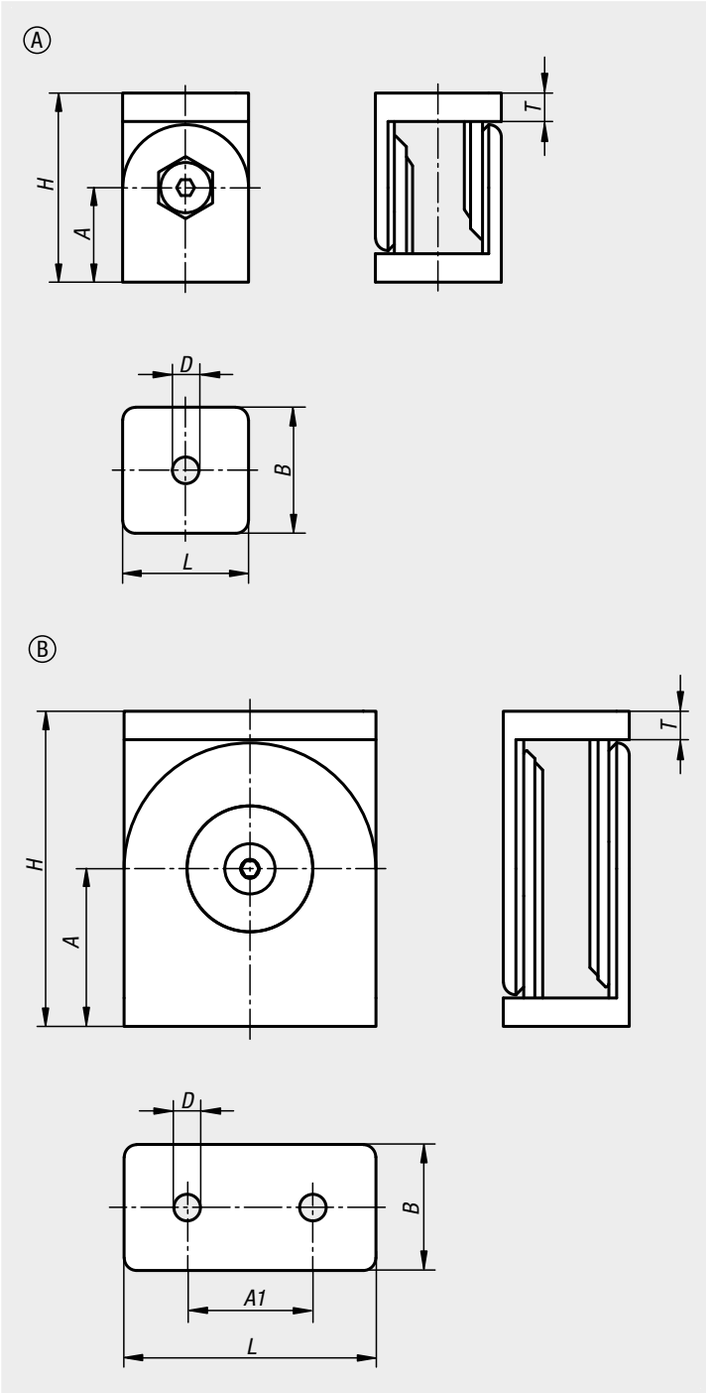

| Order No. | Type | Slot width | Form | A | A1 | B | D | H | L | T |
|---|---|---|---|---|---|---|---|---|---|---|
| **10270-063030** | I | 6 | A | 22,5 | - | 30 | 6,4 | 45 | 30 | 7 |
| **10270-084040** | I | 8 | A | 30 | - | 40 | 8,4 | 60 | 40 | 9 |
| **10270-084080** | I | 8 | B | 50 | 40 | 40 | 8,4 | 100 | 80 | 9 |
| **10270-104545** | B | 10 | A | 30 | - | 45 | 8,5 | 60 | 45 | 8 |
| **10270-104590** | B | 10 | B | 50 | 45 | 45 | 8,5 | 100 | 90 | 9 |

# 10000

## Covers

# End caps

## Type B and Type I

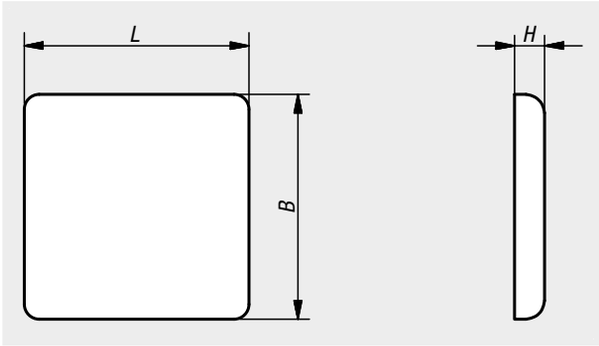


**Material:**
Polyamide fibreglass reinforced.

**Version:**
black.

**Sample order:**
nlm 10300-06303011

**Note:**
Round edged covers with rotation lock for covering the profile ends. Prevents dirt from penetrating and avoids injuries. Simple clip-on mounting.

| Order No. | Type | Slot width | Profile | B | L | H |
|---|---|---|---|---|---|---|
| **10300-06303011** | I | 6 | 30x30 | 30 | 30 | 3 |
| **10300-06306011** | I | 6 | 30x60 | 30 | 60 | 3 |
| **10300-06606011** | I | 6 | 60x60 | 60 | 60 | 3 |
| **10300-08164011** | I | 8 | 16x40 | 16 | 40 | 4 |
| **10300-08404011** | I | 8 | 40x40 | 40 | 40 | 4 |
| **10300-08408011** | I | 8 | 40x80 | 40 | 80 | 4 |
| **10300-08808011** | I | 8 | 80x80 | 80 | 80 | 4 |
| **10300-10404021** | B | 10 | 40x40 | 40 | 40 | 4 |
| **10300-10408021** | B | 10 | 40x80 | 40 | 80 | 4 |
| **10300-10454521** | B | 10 | 45x45 | 45 | 45 | 4 |
| **10300-10456021** | B | 10 | 45x60 | 45 | 60 | 4 |
| **10300-10459021** | B | 10 | 45x90 | 45 | 90 | 4 |
| **10300-10909021** | B | 10 | 90x90 | 90 | 90 | 4 |

# Cover and adapter profiles

## Type B and Type I

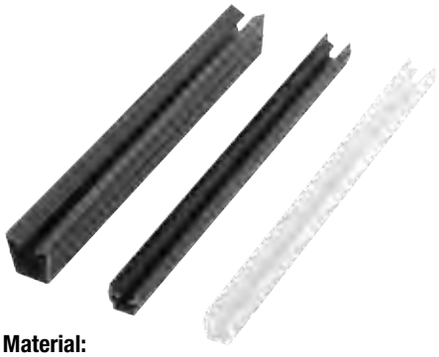

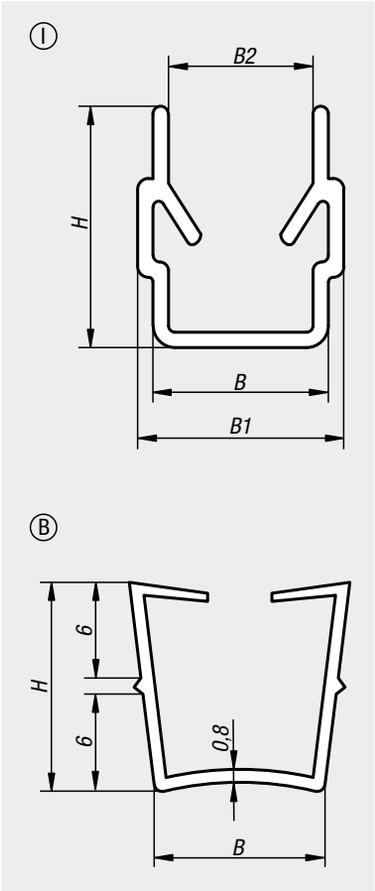


**Material:**
Type I polypropylene.
Type B polypropylene + TPE.

**Version:**
black or bright.

**Sample order:**
nlm 10315-06120351

**Note:**
The cover and adapter profile made of flexible plastic are used for two different applications. As a cover profile it seals the profile slots against dust and dirt. As an adapter profile with the open side facing out it is used to hold panel elements.

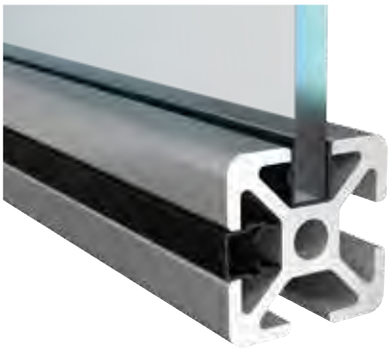

| Order No. | Colour | Type | Slot width | B | B1 | B2 | H | Length | Panel element |
|---|---|---|---|---|---|---|---|---|---|
| **10315-06120351** | black | I | 6 | 6 | 7 | 4,4 | 9,1 | 2000 | 2,0 - 3,5 |
| **10315-06120350** | Natural | I | 6 | 6 | 7 | 4,4 | 9,1 | 2000 | 2,0 - 3,5 |
| **10315-08120601** | black | I | 8 | 8 | 9,4 | 6,6 | 9,1 | 2000 | 2,0 - 6,0 |
| **10315-08140601** | black | I | 8 | 8 | 9,4 | 6,6 | 11 | 2000 | 4,0 - 6,0 |
| **10315-08140600** | Natural | I | 8 | 8 | 9,4 | 6,6 | 11 | 2000 | 4,0 - 6,0 |
| **10315-10220601** | black | B | 10 | 10 | - | - | 13 | 2000 | 2,0 - 6,0 |

# 10320

## Cover profiles

Type I

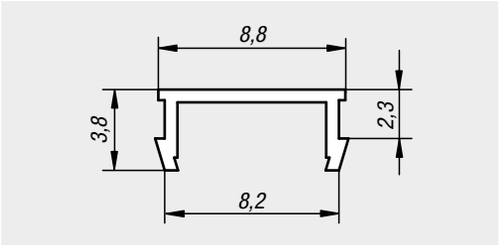


**Material:**
PVC.

**Version:**
black.

**Sample order:**
nlm 10320-0811

**Note:**
The cover profile made of flexible plastic is used as a cover for the profile slots to protect against dust and dirt.

| Order No. | Type | Slot width | Length |
|---|---|---|---|
| **10320-0811** | I | 8 | 2000 |

# 10330

## Slide rails

Type I

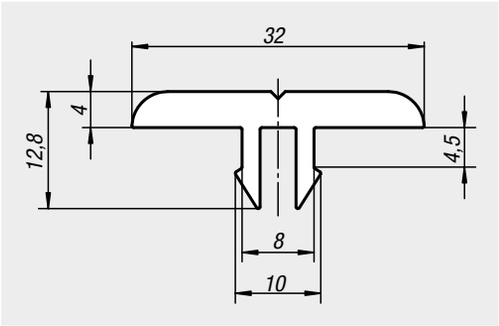


**Material:**
Polyethylene-HD.

**Version:**
black.

**Sample order:**
nlm 10330-081321

**Note:**
Low-wear slide rail with low slide friction for easy handling of goods. Slide rails can also be used as cover protection, impact protection and guide rails.

| Order No. | Type | Slot width | Length |
|---|---|---|---|
| **10330-081321** | I | 8 | 2000 |

# Notes

# Foot plates

Type B and Type I

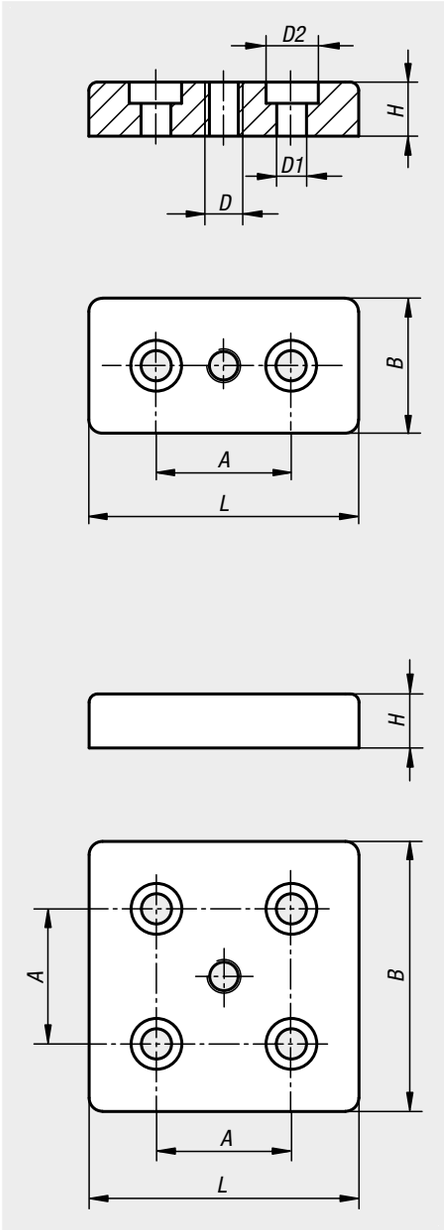


**Material:**
Die-cast zinc.

**Version:**
bright or black powder-coated.

**Sample order:**
nlm 10347-0630601081

**Note:**
Used to mount levelling feet, rollers, eye bolts and other elements. Can also be mounted to the side of a profile using slot nuts.

# Foot plates

## Type B and Type I

| Order No. | Surface | Type | Slot width | Profile | B | L | H | A | D | D1 | D2 |
|---|---|---|---|---|---|---|---|---|---|---|---|
| **10347-0840801080** | Galvanized | I | 8 | 40x80 | 40 | 80 | 16 | 40 | M8 | 9 | 15 |
| **10347-0840801100** | Galvanized | I | 8 | 40x80 | 40 | 80 | 16 | 40 | M10 | 9 | 15 |
| **10347-0840801120** | Galvanized | I | 8 | 40x80 | 40 | 80 | 16 | 40 | M12 | 9 | 15 |
| **10347-0840801160** | Galvanized | I | 8 | 40x80 | 40 | 80 | 16 | 40 | M16 | 9 | 15 |
| **10347-0880801080** | Galvanized | I | 8 | 80x80 | 80 | 80 | 16 | 40 | M8 | 9 | 15 |
| **10347-0880801100** | Galvanized | I | 8 | 80x80 | 80 | 80 | 16 | 40 | M10 | 9 | 15 |
| **10347-0880801120** | Galvanized | I | 8 | 80x80 | 80 | 80 | 16 | 40 | M12 | 9 | 15 |
| **10347-0880801160** | Galvanized | I | 8 | 80x80 | 80 | 80 | 16 | 40 | M16 | 9 | 15 |
| **10347-1040802080** | Galvanized | B | 10 | 40x80 | 40 | 80 | 16 | 40 | M8 | 14,5 | 20 |
| **10347-1040802100** | Galvanized | B | 10 | 40x80 | 40 | 80 | 16 | 40 | M10 | 14,5 | 20 |
| **10347-1040802120** | Galvanized | B | 10 | 40x80 | 40 | 80 | 16 | 40 | M12 | 14,5 | 20 |
| **10347-1040802160** | Galvanized | B | 10 | 40x80 | 40 | 80 | 16 | 40 | M16 | 14,5 | 20 |
| **10347-1045902100** | Galvanized | B | 10 | 45x90 | 45 | 90 | 16 | 45 | M10 | 14,5 | 20 |
| **10347-1045902120** | Galvanized | B | 10 | 45x90 | 45 | 90 | 16 | 45 | M12 | 14,5 | 20 |
| **10347-1045902140** | Galvanized | B | 10 | 45x90 | 45 | 90 | 16 | 45 | M14 | 14,5 | 20 |
| **10347-1045902160** | Galvanized | B | 10 | 45x90 | 45 | 90 | 16 | 45 | M16 | 14,5 | 20 |
| **10347-1045902200** | Galvanized | B | 10 | 45x90 | 45 | 90 | 16 | 45 | M20 | 14,5 | 20 |
| **10347-1090902100** | Galvanized | B | 10 | 90x90 | 90 | 90 | 16 | 45 | M10 | 14,5 | 20 |
| **10347-1090902120** | Galvanized | B | 10 | 90x90 | 90 | 90 | 16 | 45 | M12 | 14,5 | 20 |
| **10347-1090902140** | Galvanized | B | 10 | 90x90 | 90 | 90 | 16 | 45 | M14 | 14,5 | 20 |
| **10347-1090902160** | Galvanized | B | 10 | 90x90 | 90 | 90 | 16 | 45 | M16 | 14,5 | 20 |
| **10347-1090902200** | Galvanized | B | 10 | 90x90 | 90 | 90 | 16 | 45 | M20 | 14,5 | 20 |
| **10347-0630601081** | black powder-coated | I | 6 | 30x60 | 30 | 60 | 12 | 30 | M8 | 6,6 | 11 |
| **10347-0630601101** | black powder-coated | I | 6 | 30x60 | 30 | 60 | 12 | 30 | M10 | 6,6 | 11 |
| **10347-0630601121** | black powder-coated | I | 6 | 30x60 | 30 | 60 | 12 | 30 | M12 | 6,6 | 11 |
| **10347-0630601161** | black powder-coated | I | 6 | 30x60 | 30 | 60 | 12 | 30 | M16 | 6,6 | 11 |
| **10347-0660601081** | black powder-coated | I | 6 | 60x60 | 60 | 60 | 12 | 30 | M8 | 6,6 | 11 |
| **10347-0660601101** | black powder-coated | I | 6 | 60x60 | 60 | 60 | 12 | 30 | M10 | 6,6 | 11 |
| **10347-0660601121** | black powder-coated | I | 6 | 60x60 | 60 | 60 | 12 | 30 | M12 | 6,6 | 11 |
| **10347-0660601161** | black powder-coated | I | 8 | 60x60 | 60 | 60 | 16 | 40 | M16 | 9 | 15 |
| **10347-0840801081** | black powder-coated | I | 8 | 40x80 | 40 | 80 | 16 | 40 | M8 | 9 | 15 |
| **10347-0840801101** | black powder-coated | I | 8 | 40x80 | 40 | 80 | 16 | 40 | M10 | 9 | 15 |
| **10347-0840801121** | black powder-coated | I | 8 | 40x80 | 40 | 80 | 16 | 40 | M12 | 9 | 15 |
| **10347-0840801161** | black powder-coated | I | 8 | 40x80 | 40 | 80 | 16 | 40 | M16 | 9 | 15 |
| **10347-0880801081** | black powder-coated | I | 8 | 80x80 | 80 | 80 | 16 | 40 | M8 | 9 | 15 |
| **10347-0880801101** | black powder-coated | I | 8 | 80x80 | 80 | 80 | 16 | 40 | M10 | 9 | 15 |
| **10347-0880801121** | black powder-coated | I | 8 | 80x80 | 80 | 80 | 16 | 40 | M12 | 9 | 15 |
| **10347-0880801161** | black powder-coated | I | 8 | 80x80 | 80 | 80 | 16 | 40 | M16 | 9 | 15 |
| **10347-1045902101** | black powder-coated | B | 10 | 45x90 | 45 | 90 | 16 | 45 | M10 | 14,5 | 20 |
| **10347-1045902121** | black powder-coated | B | 10 | 45x90 | 45 | 90 | 16 | 45 | M12 | 14,5 | 20 |
| **10347-1045902141** | black powder-coated | B | 10 | 45x90 | 45 | 90 | 16 | 45 | M14 | 14,5 | 20 |
| **10347-1045902161** | black powder-coated | B | 10 | 45x90 | 45 | 90 | 16 | 45 | M16 | 14,5 | 20 |
| **10347-1045902201** | black powder-coated | B | 10 | 45x90 | 45 | 90 | 16 | 45 | M20 | 14,5 | 20 |
| **10347-1090902101** | black powder-coated | B | 10 | 90x90 | 90 | 90 | 16 | 45 | M10 | 14,5 | 20 |
| **10347-1090902121** | black powder-coated | B | 10 | 90x90 | 90 | 90 | 16 | 45 | M12 | 14,5 | 20 |
| **10347-1090902141** | black powder-coated | B | 10 | 90x90 | 90 | 90 | 16 | 45 | M14 | 14,5 | 20 |
| **10347-1090902161** | black powder-coated | B | 10 | 90x90 | 90 | 90 | 16 | 45 | M16 | 14,5 | 20 |
| **10347-1090902201** | black powder-coated | B | 10 | 90x90 | 90 | 90 | 16 | 45 | M20 | 14,5 | 20 |

# Notes

# 06000

## Grips

# Pull handles

**Material:**
Glass bead reinforced thermoplastic

**Version:**
Matt black or orange

**Sample order:**
nlm 06904-1120081

**Note:**
Dimension “A” applies after mounting. Before mounting it can be up to 2 mm smaller due to the release of the bending stress.

**Assembly:**
From the front.

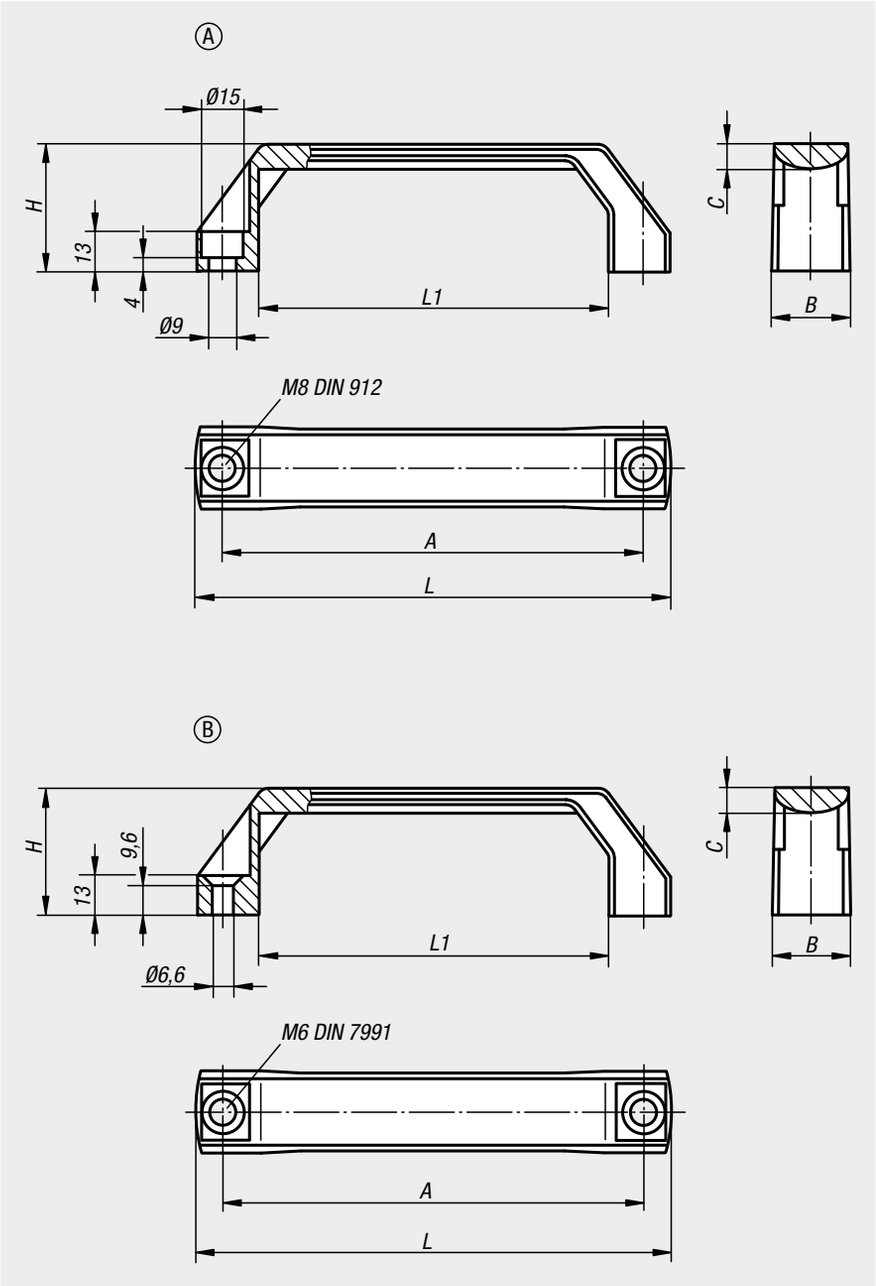


| Order No. Black grey RAL 7021 | Order No. Orange | Form | A | B | C | H | L | L1 | Load capacity N |
|---|---|---|---|---|---|---|---|---|---|
| 06904-1120081 | 06904-1120082 | A | 120 | 26 | 8 | 42 | 138 | 96 | 1000 |
| 06904-1140081 | 06904-1140082 | A | 140 | 26 | 8 | 42 | 158 | 116 | 1000 |
| 06904-1160081 | 06904-1160082 | A | 160 | 28 | 9 | 45 | 178 | 136 | 1000 |
| 06904-2120061 | 06904-2120062 | B | 120 | 26 | 8 | 42 | 138 | 96 | 1000 |
| 06904-2140061 | 06904-2140062 | B | 140 | 26 | 8 | 42 | 158 | 116 | 1000 |
| 06904-2160061 | 06904-2160062 | B | 160 | 28 | 9 | 45 | 178 | 136 | 1000 |

# 06909

## Pull handles arch

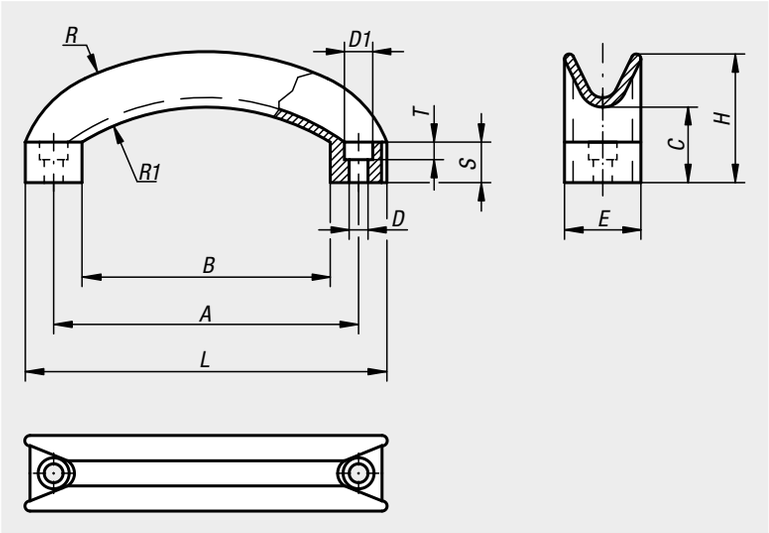


**Material:**
Black grey thermoplastic.

**Sample order:**
nlm 06909-11406

**Assembly:**
From the front.

| Order No. | D | D1 | A | B | C | E | H | L | R | R1 | S | T |
|---|---|---|---|---|---|---|---|---|---|---|---|---|
| **06909-11406** | 6,5 | 10,5 | 114 | 92 | 29 | 28 | 48 | 134 | 117 | 79 | 15 | 6,5 |

# 06920

## Pull handles oval

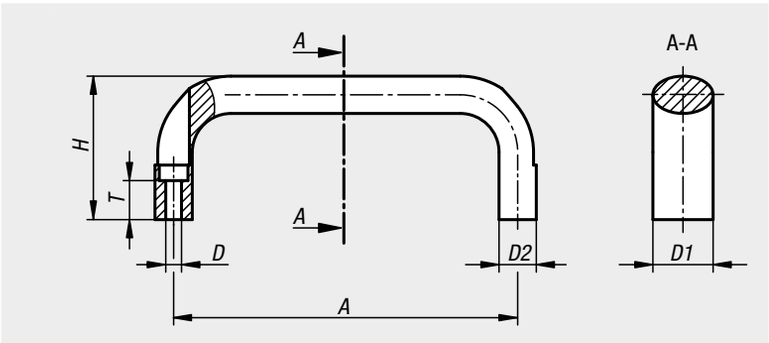


**Material:**
Oval aluminium EN AW-6060

**Version:**
Black powder-coated or ruby red RAL 3003.

**Sample order:**
nlm 06920-11000105

**Assembly:**
From the front.

**Accessories:**
Suitable screws for mounting the handles:
- Socket head screw ISO 4762-M5/ M6.

| Order No. black | Order No. Ruby red RAL 3003 | A | D | D1 | D2 | H | T | Load capacity N |
|---|---|---|---|---|---|---|---|---|
| **06920-11000105** | **06920-11002705** | 100 | 5,5 | 21 | 13 | 50 | 13,6 | 1000 |
| **06920-11120105** | **06920-11122705** | 112 | 5,5 | 21 | 13 | 50 | 13,6 | 1000 |
| **06920-11200105** | **06920-11202705** | 120 | 5,5 | 21 | 13 | 50 | 13,6 | 1000 |
| **06920-11280105** | **06920-11282705** | 128 | 5,5 | 21 | 13 | 50 | 13,6 | 1000 |
| **06920-11600105** | **06920-11602705** | 160 | 5,5 | 21 | 13 | 50 | 13,6 | 1000 |
| **06920-11120106** | **06920-11122706** | 112 | 6,6 | 25 | 17 | 55 | 11 | 1000 |
| **06920-11200106** | **06920-11202706** | 120 | 6,6 | 25 | 17 | 55 | 11 | 1000 |
| **06920-11280106** | **06920-11282706** | 128 | 6,6 | 25 | 17 | 55 | 11 | 1000 |
| **06920-11600106** | **06920-11602706** | 160 | 6,6 | 25 | 17 | 55 | 11 | 1000 |
| **06920-11800106** | **06920-11802706** | 180 | 6,6 | 25 | 17 | 55 | 11 | 1000 |

# 06926

## Pull handles tubular

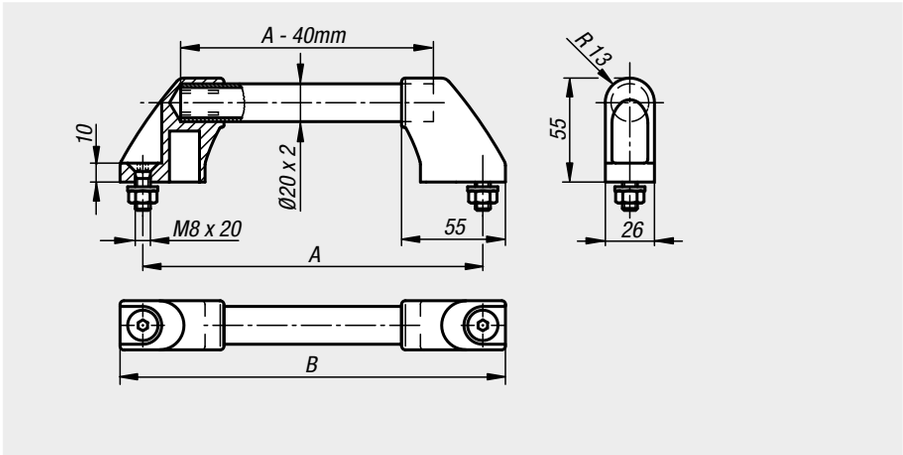


**Material:**
Legs black glass-bead reinforced thermoplastic.
Grip tube aluminium.

**Version:**
Form A
Grip, ground and natural colour anodised
Form B
Grip with serrated plastic sheath.

**Sample order:**
nlm 06926-200

**Note:**
The legs have 4 webs in the hole for the grip tube. When pushing the tube in, these are trimmed off and produce a precise seating.
Black galvanized fastening screws, suitable washers and nuts are supplied.

**Assembly:**
From the front.

| Order No. Form A | Order No. Form B | A | B | Load capacity N |
|---|---|---|---|---|
| **06926-180** | **06926-1803** | 180 | 204 | 500 |
| **06926-200** | **06926-2003** | 200 | 224 | 500 |
| **06926-250** | **06926-2503** | 250 | 274 | 500 |
| **06926-300** | **06926-3003** | 300 | 324 | 500 |
| **06926-350** | **06926-3503** | 350 | 374 | 500 |
| **06926-400** | **06926-4003** | 400 | 424 | 500 |
| **06926-500** | **06926-5003** | 500 | 524 | 500 |
| **06926-600** | **06926-6003** | 600 | 624 | 500 |

# 06937

## Pull handles tubular

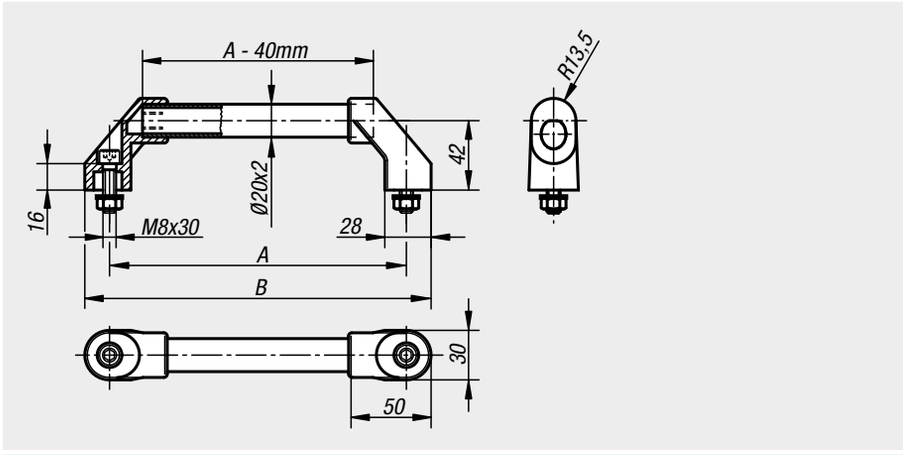


**Material:**
Legs black glass-bead reinforced thermoplastic.
Grip aluminium EN AW-6060.

**Version:**
Form A
Grip, ground and natural colour anodised
Form B
Grip with serrated plastic sheath.

**Sample order:**
nlm 06937-3001

**Note:**
The legs have 4 webs in the hole for the grip tube. When pushing the tube in these are trimmed off and produce a precise seating. Black galvanized fastening screws, suitable washers and nuts are supplied.

**Assembly:**
From the front.

| Order No. Form A | Order No. Form B | A | B | Load capacity N |
|---|---|---|---|---|
| **06937-1801** | **06937-1802** | 180 | 210 | 1000 |
| **06937-2001** | **06937-2002** | 200 | 230 | 1000 |
| **06937-2501** | **06937-2502** | 250 | 280 | 1000 |
| **06937-3001** | **06937-3002** | 300 | 330 | 1000 |
| **06937-3501** | **06937-3502** | 350 | 380 | 1000 |
| **06937-4001** | **06937-4002** | 400 | 430 | 1000 |
| **06937-5001** | **06937-5002** | 500 | 530 | 1000 |
| **06937-6001** | **06937-6002** | 600 | 630 | 1000 |

# Pull handles tubular

**Material:**
Grip aluminium EN AW-6060.
Legs glass-bead reinforced polyamide.

**Version:**
Grip natural colour anodized or with black serrated plastic cover.

**Sample order:**
nlm 06939-150203

**Note:**
The legs have 2 or 4 PVC profile pins in the hole for the grip tube. When pushing the tube in these are trimmed off and produce a precise seating.
Black galvanized fastening screws, suitable washers and nuts are supplied.

**Assembly:**
From the front.

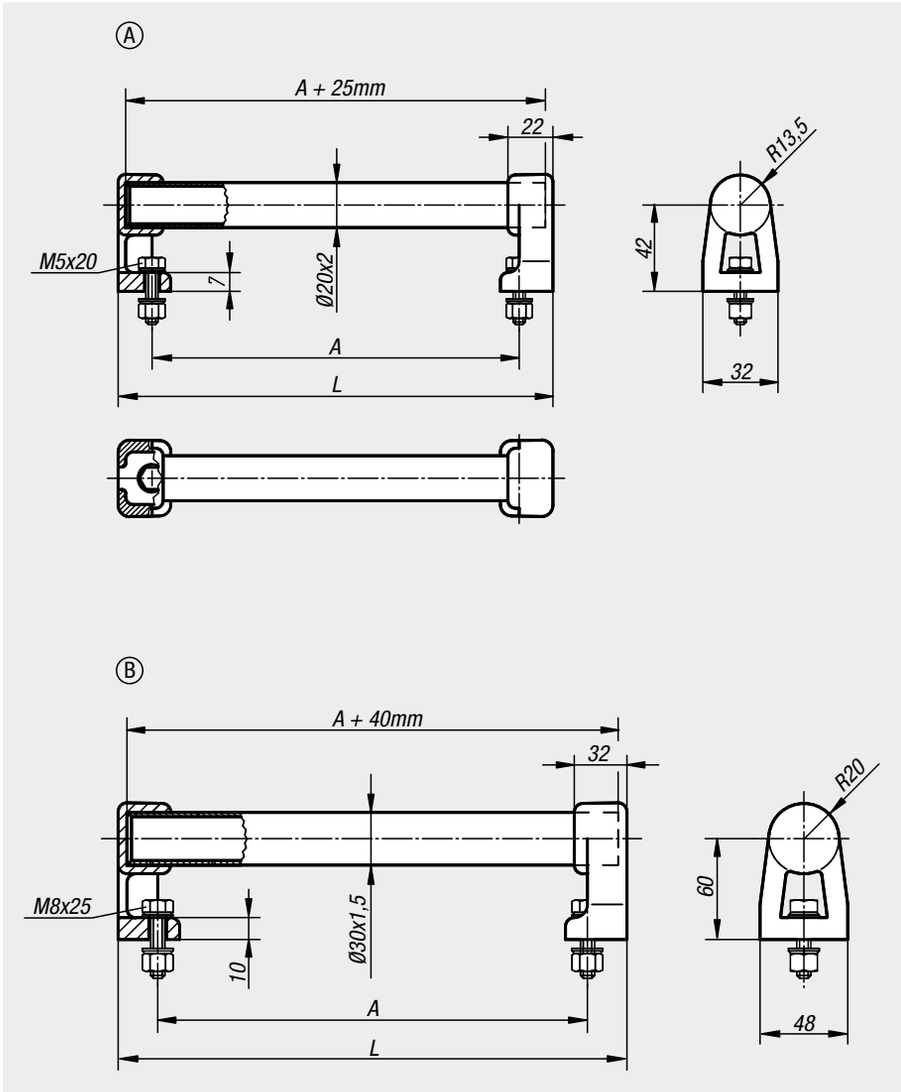


| Order No. Natural | Order No. black | Form | A | L | Load capacity N |
|---|---|---|---|---|---|
| 06939-150203 | 06939-150202 | A | 150 | 184 | 1000 |
| 06939-200203 | 06939-200202 | A | 200 | 234 | 1000 |
| 06939-300203 | 06939-300202 | A | 300 | 334 | 1000 |
| 06939-400203 | 06939-400202 | A | 400 | 434 | 1000 |
| 06939-500203 | 06939-500202 | A | 500 | 534 | 1000 |
| 06939-150303 | 06939-150302 | B | 150 | 200 | 1000 |
| 06939-300303 | 06939-300302 | B | 300 | 350 | 1000 |
| 06939-400303 | 06939-400302 | B | 400 | 450 | 1000 |
| 06939-200303 | 06939-200302 | B | 200 | 250 | 1000 |
| 06939-500303 | 06939-500302 | B | 500 | 550 | 1000 |

# Pull handles angled

**Material:**
Glass-bead reinforced thermoplastic PA

**Version:**
black.

**Sample order:**
nlm 06975-100081
06975-1 (2 per pack)

**Note:**
Ergonomic design pull handles with finger shield. For mounting on doors, hatches and aluminium profiles. Ideal for double-leaf doors. Fastening with hexagon or socket head M8 bolts.

Cover caps are not supplied.

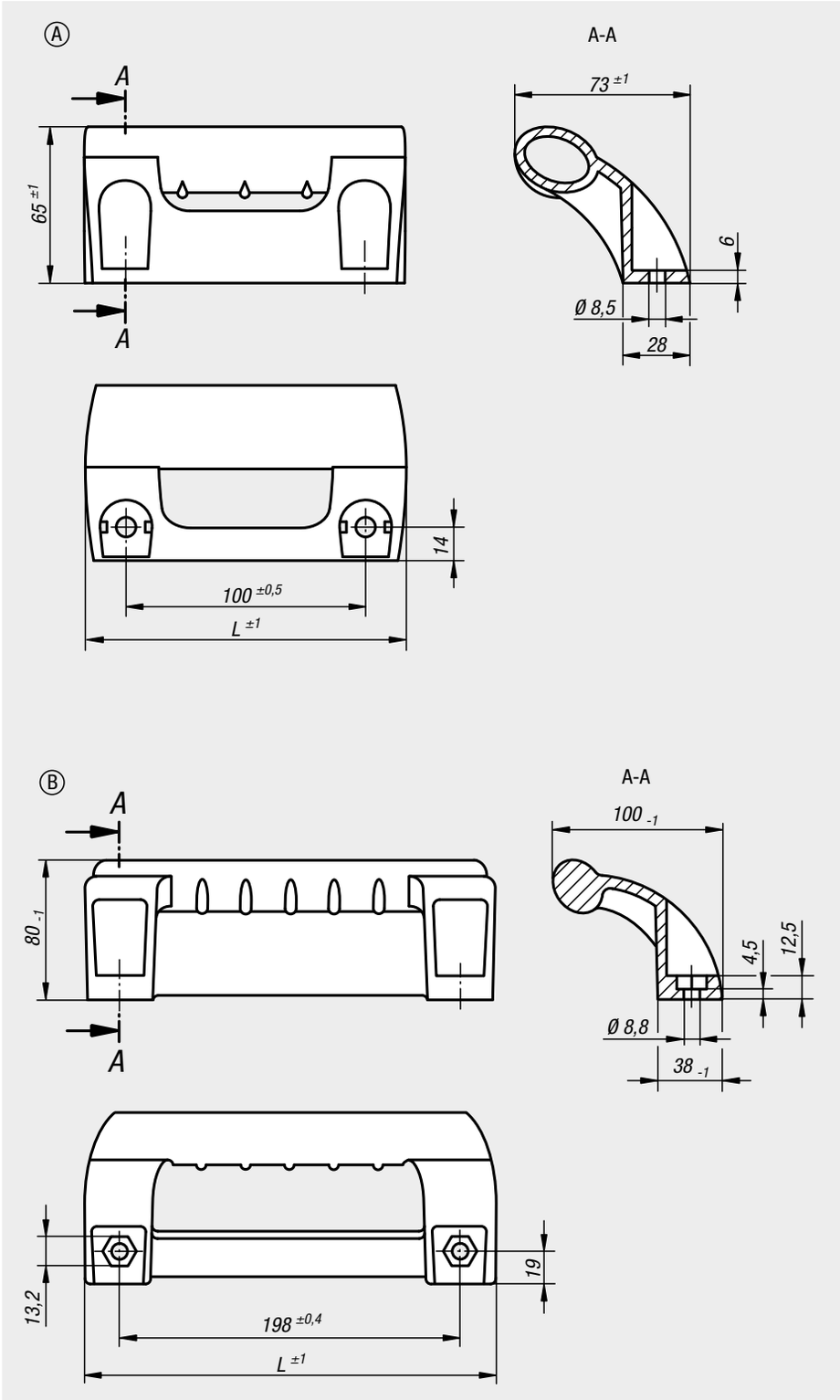

| Order No. | Form | L | Load capacity N | Order No. cover caps |
|---|---|---|---|---|
| **06975-100081** | A | 134 | 1000 | 06975-1 |
| **06975-198081** | B | 236 | 1000 | 06975-3 |

# 03000

## Locks

# Double ball catch

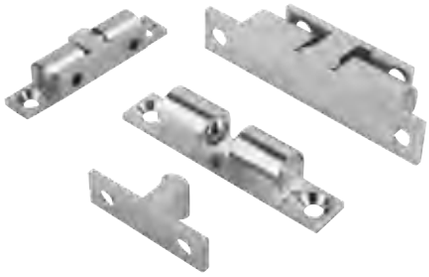

**Material:**
Housing and latch chrome plated brass.
Balls and springs stainless steel.

**Sample order:**
nlm 03075-50

**Note:**
Quick catch for various applications such as holding doors, hatches, screens etc. closed. The double ball catch consists of a housing and a latch bracket that engages between the two balls. The latch bracket can engage from the front or the side. The engagement pressure is adjustable.

**Drawing reference:**
1) counterbore DIN 74-A

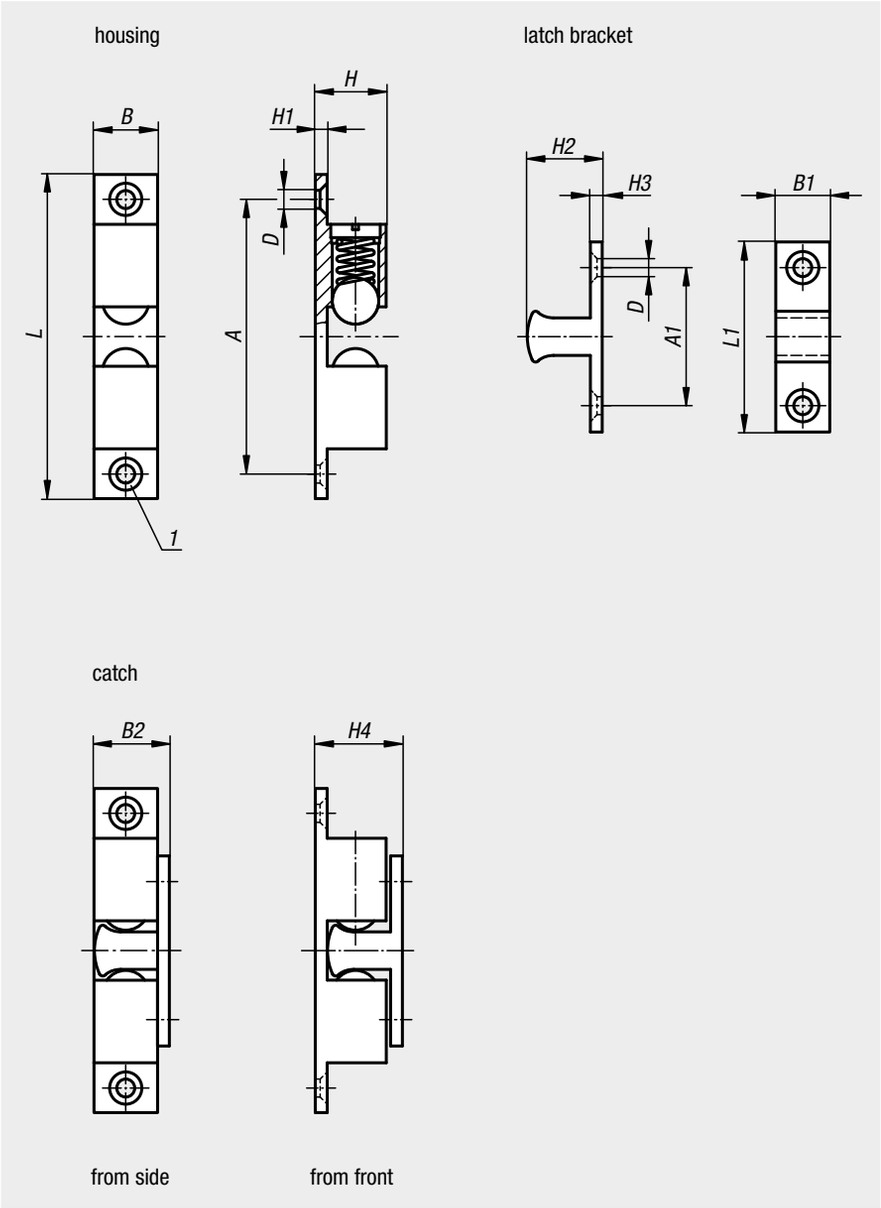


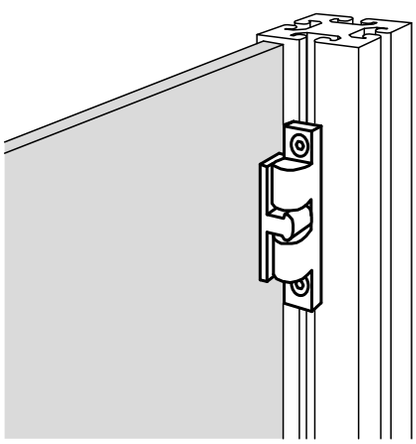

| Order No. | A | A1 | B | B1 | B2 | D | H | H1 | H2 | H3 | H4 | L | L1 |
|---|---|---|---|---|---|---|---|---|---|---|---|---|---|
| **03075-50** | 39,8 | 19,8 | 8,8 | 7,6 | 10,8 | 3,8 | 10,6 | 2 | 11,2 | 2 | 13,2 | 49 | 28,8 |
| **03075-60** | 50 | 23,5 | 11 | 9 | 13,5 | 4,8 | 13,2 | 2,4 | 13,5 | 2,2 | 15,5 | 60 | 35 |
| **03075-70** | 58 | 30 | 13 | 12 | 15,2 | 4,8 | 15 | 2,4 | 15,7 | 2,2 | 18,1 | 68,4 | 40,2 |

# Barrel slide bolts

**Material:**
Housing die-cast zinc.
Grip, underlay and slot tabs thermoplastic PA.
Bolt stainless steel.

**Version:**
Housing painted silver.
Grip, underlay and slot tabs black.
Bolt bright.

**Sample order:**
nlm 03102-38038028

**Note:**
Spring loaded bolt.
Supplied with:
- 2 underlays for mounting on level surfaces.
- 2 of each tabs for mounting on profiles with 8 or 10 mm slots.

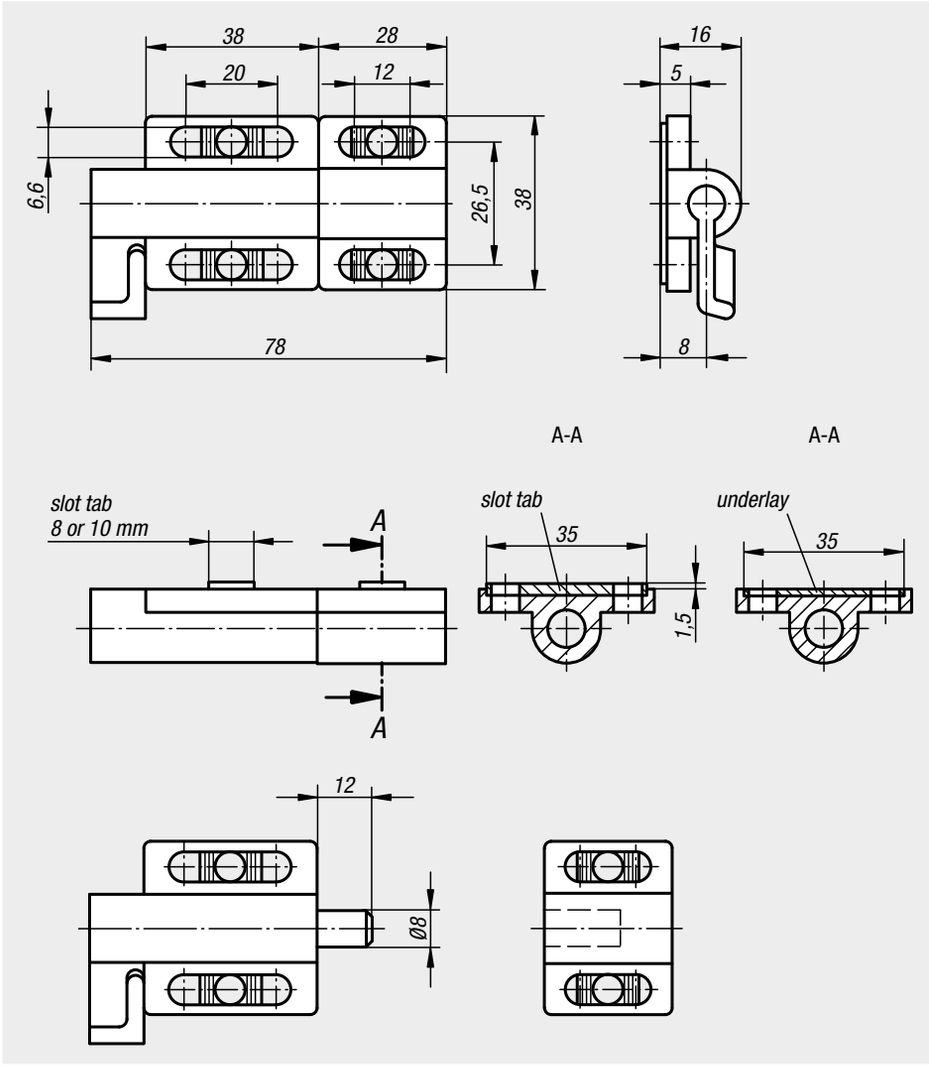

| Order No. | Spring force initial pressure F1 approx. N | Spring force final pressure F2 approx. N |
|---|---|---|
| 03102-38038028 | 5 | 15 |

# Notes

# 27000

## Hinges

# Technical information for hinges

**Hinges**
In the tables on the following pages are listed a large range of hinge variations. Many more variations are possible if hinges with guide tabs are required i.e. when combining aluminium profiles with different slot widths.

**By the way,**
hinges are supplied with a stainless steel hinge pin as standard.
Hinges 27853 and 27868 are supplied with a steel hinge pin.

**Left and right hinge**
Each lift-off hinge has a left and right version, before ordering it should be known on which side the door or hatch is to be mounted.

**Left hinge.**
The left hinge half is fixed.
The hatch or door opens from right to left.

**Right hinge.**
The right hinge half is fixed.
The hatch or door opens from left to right.

**Fixed hinge.**
The hinge is non-liftoff.
It is suitable for opening left or right.

**Guide tabs**
Many hinges can be supplied on request with guide tabs for the slots of aluminium profiles. They secure the hinge against twisting and make it stronger. The hinges are designed in such a way that the guide tabs can simply be broken out with a screwdriver.

**without**
guide tabs

**with**
guide tabs
for aluminium
profiles with slot

**Tip**
If you want to fit a door or hatch so that it cannot be lifted off, you can still use a left and right lift-off hinge. The two hinges are fitted in the end position and secure each other mutually.

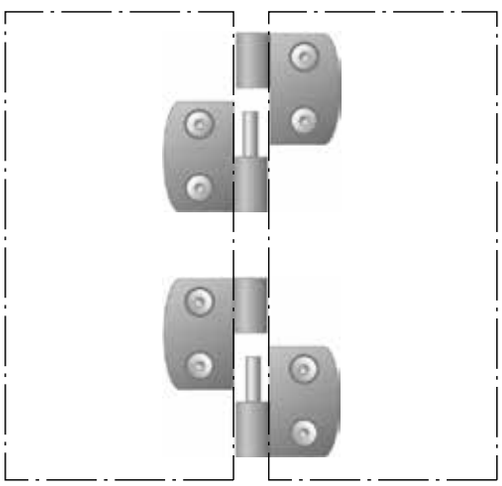

# Hinges

plastic, lift-off, left

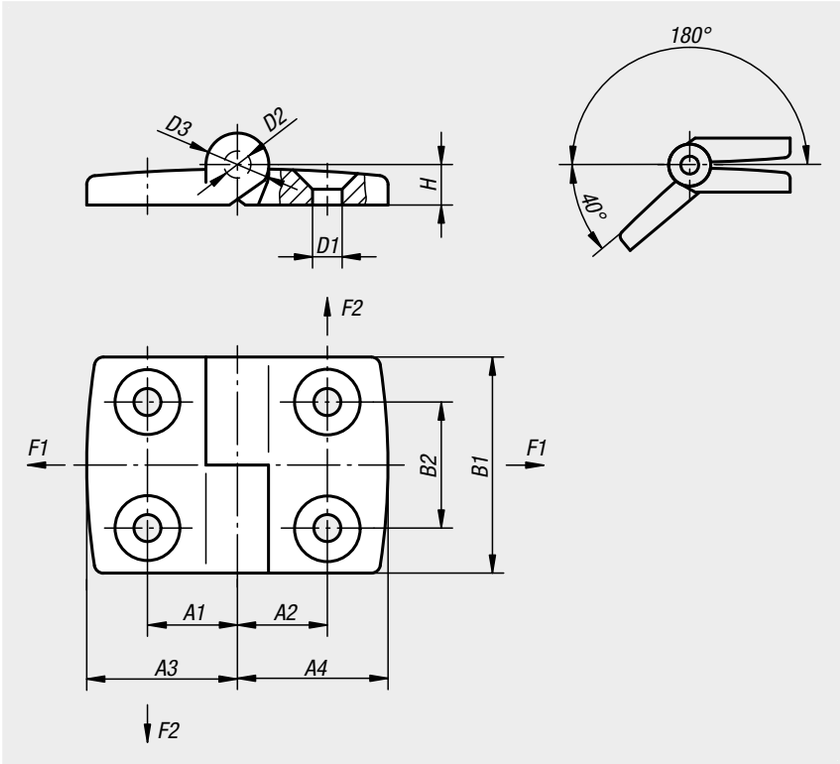


**Material:**
Fibreglass reinforced thermoplastic.
Hinge pin stainless steel.

**Version:**
Hinge black. Pin bright.

**Sample order:**
nlm 27850-1301825

**Note:**
All hinges can be supplied on request with guide tabs for the slots of aluminium profiles (slots 6, 8 and 10). They facilitate mounting, secure the hinge against twisting and make it stronger.

| Order No. | A1 | A2 | A3 | A4 | B1 | B2 | D1 | D2 | D3 | H | F1 max. kN | F2 max. kN |
|---|---|---|---|---|---|---|---|---|---|---|---|---|
| **27850-1251515** | 15 | 15 | 26 | 26 | 48 | 28 | 6,6 | 6 | 14 | 9 | 0,625 | 0,425 |
| **27850-1251518** | 15 | 17,5 | 26 | 29,5 | 48 | 28 | 6,6 | 6 | 14 | 9 | 0,7 | 0,5 |
| **27850-1251520** | 15 | 20 | 26 | 35,5 | 48 | 28 | 6,6 | 6 | 14 | 9 | 0,7 | 0,4 |
| **27850-1251523** | 15 | 22,5 | 26 | 38,5 | 48 | 28 | 6,6 | 6 | 14 | 9 | 0,8 | 0,35 |
| **27850-1251525** | 15 | 25 | 26 | 43,5 | 48 | 28 | 6,6 | 6 | 14 | 9 | 0,8 | 0,325 |
| **27850-1251528** | 15 | 27,5 | 26 | 48,5 | 48 | 28 | 6,6 | 6 | 14 | 9 | 0,8 | 0,32 |
| **27850-1251533** | 15 | 32,5 | 26 | 57,5 | 48 | 28 | 6,6 | 6 | 14 | 9 | 0,8 | 0,24 |
| **27850-1301815** | 17,5 | 15 | 29,5 | 26 | 48 | 28 | 6,6 | 6 | 14 | 9 | 0,75 | 0,45 |
| **27850-1301818** | 17,5 | 17,5 | 29,5 | 29,5 | 48 | 28 | 6,6 | 6 | 14 | 9 | 0,75 | 0,5 |
| **27850-1301820** | 17,5 | 20 | 29,5 | 35,5 | 48 | 28 | 6,6 | 6 | 14 | 9 | 0,75 | 0,4 |
| **27850-1301823** | 17,5 | 22,5 | 29,5 | 38,5 | 48 | 28 | 6,6 | 6 | 14 | 9 | 0,8 | 0,35 |
| **27850-1301825** | 17,5 | 25 | 29,5 | 43,5 | 48 | 28 | 6,6 | 6 | 14 | 9 | 0,8 | 0,35 |
| **27850-1301828** | 17,5 | 27,5 | 29,5 | 48,5 | 48 | 28 | 6,6 | 6 | 14 | 9 | 0,8 | 0,35 |
| **27850-1301833** | 17,5 | 32,5 | 29,5 | 57,5 | 48 | 28 | 6,6 | 6 | 14 | 9 | 0,8 | 0,24 |
| **27850-1352015** | 20 | 15 | 35,5 | 26 | 48 | 28 | 6,6 | 6 | 14 | 9 | 0,75 | 0,4 |
| **27850-1352018** | 20 | 17,5 | 35,5 | 29,5 | 48 | 28 | 6,6 | 6 | 14 | 9 | 0,75 | 0,5 |
| **27850-1352020** | 20 | 20 | 35,5 | 35,5 | 48 | 28 | 6,6 | 6 | 14 | 9 | 0,75 | 0,4 |
| **27850-1352023** | 20 | 22,5 | 35,5 | 38,5 | 48 | 28 | 6,6 | 6 | 14 | 9 | 0,8 | 0,35 |
| **27850-1352025** | 20 | 25 | 35,5 | 43,5 | 48 | 28 | 6,6 | 6 | 14 | 9 | 0,8 | 0,35 |
| **27850-1352028** | 20 | 27,5 | 35,5 | 48,5 | 48 | 28 | 6,6 | 6 | 14 | 9 | 0,9 | 0,35 |
| **27850-1352033** | 20 | 32,5 | 35,5 | 57,5 | 48 | 28 | 6,6 | 6 | 14 | 9 | 0,8 | 0,24 |
| **27850-1402315** | 22,5 | 15 | 38,5 | 26 | 48 | 28 | 6,6 | 6 | 14 | 9 | 0,65 | 0,425 |
| **27850-1402318** | 22,5 | 17,5 | 38,5 | 29,5 | 48 | 28 | 6,6 | 6 | 14 | 9 | 0,75 | 0,5 |
| **27850-1402320** | 22,5 | 20 | 38,5 | 35,5 | 48 | 28 | 6,6 | 6 | 14 | 9 | 0,75 | 0,4 |
| **27850-1402323** | 22,5 | 22,5 | 38,5 | 38,5 | 48 | 28 | 6,6 | 6 | 14 | 9 | 0,8 | 0,4 |

| Order No. | A1 | A2 | A3 | A4 | B1 | B2 | D1 | D2 | D3 | H | F1 max. kN | F2 max. kN |
|---|---|---|---|---|---|---|---|---|---|---|---|---|
| **27850-1402325** | 22,5 | 25 | 38,5 | 43,5 | 48 | 28 | 6,6 | 6 | 14 | 9 | 0,8 | 0,35 |
| **27850-1402328** | 22,5 | 27,5 | 38,5 | 48,5 | 48 | 28 | 6,6 | 6 | 14 | 9 | 0,8 | 0,35 |
| **27850-1402333** | 22,5 | 32,5 | 38,5 | 57,5 | 48 | 28 | 6,6 | 6 | 14 | 9 | 0,8 | 0,24 |
| **27850-1452515** | 25 | 15 | 43,5 | 26 | 48 | 28 | 6,6 | 6 | 14 | 9 | 0,65 | 0,425 |
| **27850-1452518** | 25 | 17,5 | 43,5 | 29,5 | 48 | 28 | 6,6 | 6 | 14 | 9 | 0,75 | 0,5 |
| **27850-1452520** | 25 | 20 | 43,5 | 35,5 | 48 | 28 | 6,6 | 6 | 14 | 9 | 0,7 | 0,4 |
| **27850-1452523** | 25 | 22,5 | 43,5 | 38,5 | 48 | 28 | 6,6 | 6 | 14 | 9 | 0,8 | 0,35 |
| **27850-1452525** | 25 | 25 | 43,5 | 43,5 | 48 | 28 | 6,6 | 6 | 14 | 9 | 0,8 | 0,325 |
| **27850-1452528** | 25 | 27,5 | 43,5 | 48,5 | 48 | 28 | 6,6 | 6 | 14 | 9 | 0,8 | 0,32 |
| **27850-1452533** | 25 | 32,5 | 43,5 | 57,5 | 48 | 28 | 6,6 | 6 | 14 | 9 | 0,8 | 0,24 |
| **27850-1502815** | 27,5 | 15 | 48,5 | 26 | 48 | 28 | 6,6 | 6 | 14 | 9 | 0,65 | 0,425 |
| **27850-1502818** | 27,5 | 17,5 | 48,5 | 29,5 | 48 | 28 | 6,6 | 6 | 14 | 9 | 0,75 | 0,5 |
| **27850-1502820** | 27,5 | 20 | 48,5 | 35,5 | 48 | 28 | 6,6 | 6 | 14 | 9 | 0,7 | 0,4 |
| **27850-1502823** | 27,5 | 22,5 | 48,5 | 38,5 | 48 | 28 | 6,6 | 6 | 14 | 9 | 0,8 | 0,35 |
| **27850-1502825** | 27,5 | 25 | 48,5 | 43,5 | 48 | 28 | 6,6 | 6 | 14 | 9 | 0,8 | 0,325 |
| **27850-1502828** | 27,5 | 27,5 | 48,5 | 48,5 | 48 | 28 | 6,6 | 6 | 14 | 9 | 0,8 | 0,32 |
| **27850-1502833** | 27,5 | 32,5 | 48,5 | 57,5 | 48 | 28 | 6,6 | 6 | 14 | 9 | 0,8 | 0,24 |
| **27850-1603315** | 32,5 | 15 | 57,5 | 26 | 48 | 28 | 6,6 | 6 | 14 | 9 | 0,65 | 0,425 |
| **27850-1603318** | 32,5 | 17,5 | 57,5 | 29,5 | 48 | 28 | 6,6 | 6 | 14 | 9 | 0,75 | 0,5 |
| **27850-1603320** | 32,5 | 20 | 57,5 | 35,5 | 48 | 28 | 6,6 | 6 | 14 | 9 | 0,7 | 0,4 |
| **27850-1603323** | 32,5 | 22,5 | 57,5 | 38,5 | 48 | 28 | 6,6 | 6 | 14 | 9 | 0,8 | 0,35 |
| **27850-1603325** | 32,5 | 25 | 57,5 | 43,5 | 48 | 28 | 6,6 | 6 | 14 | 9 | 0,8 | 0,325 |
| **27850-1603328** | 32,5 | 27,5 | 57,5 | 48,5 | 48 | 28 | 6,6 | 6 | 14 | 9 | 0,9 | 0,32 |
| **27850-1603333** | 32,5 | 32,5 | 57,5 | 57,5 | 48 | 28 | 6,6 | 6 | 14 | 9 | 0,9 | 0,24 |

# Hinges

## plastic, lift-off, right

**Material:**
Fibreglass reinforced thermoplastic.
Hinge pin stainless steel.

**Version:**
Hinge black. Pin bright.

**Sample order:**
nlm 27850-2251523

**Note:**
All hinges can be supplied on request with guide tabs for the slots of aluminium profiles (slots 6, 8 and 10). They facilitate mounting, secure the hinge against twisting and make it stronger.

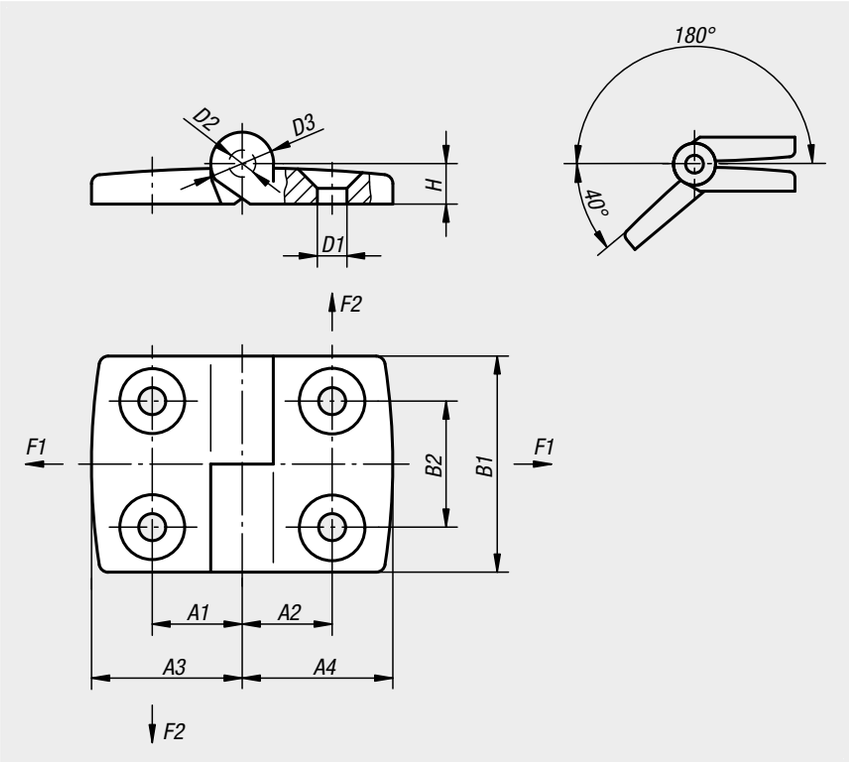


| Order No. | A1 | A2 | A3 | A4 | B1 | B2 | D1 | D2 | D3 | H | F1 max. kN | F2 max. kN |
|---|---|---|---|---|---|---|---|---|---|---|---|---|
| **27850-2251515** | 15 | 15 | 26 | 26 | 48 | 28 | 6,6 | 6 | 14 | 9 | 0,625 | 0,425 |
| **27850-2251518** | 15 | 17,5 | 26 | 29,5 | 48 | 28 | 6,6 | 6 | 14 | 9 | 0,7 | 0,5 |
| **27850-2251520** | 15 | 20 | 26 | 35,5 | 48 | 28 | 6,6 | 6 | 14 | 9 | 0,7 | 0,4 |
| **27850-2251523** | 15 | 22,5 | 26 | 38,5 | 48 | 28 | 6,6 | 6 | 14 | 9 | 0,8 | 0,35 |
| **27850-2251525** | 15 | 25 | 26 | 43,5 | 48 | 28 | 6,6 | 6 | 14 | 9 | 0,8 | 0,325 |
| **27850-2251528** | 15 | 27,5 | 26 | 48,5 | 48 | 28 | 6,6 | 6 | 14 | 9 | 0,8 | 0,32 |
| **27850-2251533** | 15 | 32,5 | 26 | 57,5 | 48 | 28 | 6,6 | 6 | 14 | 9 | 0,8 | 0,24 |
| **27850-2301815** | 17,5 | 15 | 29,5 | 26 | 48 | 28 | 6,6 | 6 | 14 | 9 | 0,75 | 0,45 |
| **27850-2301818** | 17,5 | 17,5 | 29,5 | 29,5 | 48 | 28 | 6,6 | 6 | 14 | 9 | 0,75 | 0,5 |
| **27850-2301820** | 17,5 | 20 | 29,5 | 35,5 | 48 | 28 | 6,6 | 6 | 14 | 9 | 0,7 | 0,4 |
| **27850-2301823** | 17,5 | 22,5 | 29,5 | 38,5 | 48 | 28 | 6,6 | 6 | 14 | 9 | 0,8 | 0,35 |
| **27850-2301825** | 17,5 | 25 | 29,5 | 43,5 | 48 | 28 | 6,6 | 6 | 14 | 9 | 0,8 | 0,35 |
| **27850-2301828** | 17,5 | 27,5 | 29,5 | 48,5 | 48 | 28 | 6,6 | 6 | 14 | 9 | 0,8 | 0,35 |
| **27850-2301833** | 17,5 | 32,5 | 29,5 | 57,5 | 48 | 28 | 6,6 | 6 | 14 | 9 | 0,8 | 0,24 |
| **27850-2352015** | 20 | 15 | 35,5 | 26 | 48 | 28 | 6,6 | 6 | 14 | 9 | 0,7 | 0,4 |
| **27850-2352018** | 20 | 17,5 | 35,5 | 29,5 | 48 | 28 | 6,6 | 6 | 14 | 9 | 0,75 | 0,5 |
| **27850-2352020** | 20 | 20 | 35,5 | 35,5 | 48 | 28 | 6,6 | 6 | 14 | 9 | 0,75 | 0,4 |
| **27850-2352023** | 20 | 22,5 | 35,5 | 38,5 | 48 | 28 | 6,6 | 6 | 14 | 9 | 0,8 | 0,35 |
| **27850-2352025** | 20 | 25 | 35,5 | 43,5 | 48 | 28 | 6,6 | 6 | 14 | 9 | 0,8 | 0,35 |
| **27850-2352028** | 20 | 27,5 | 35,5 | 48,5 | 48 | 28 | 6,6 | 6 | 14 | 9 | 0,8 | 0,35 |
| **27850-2352033** | 20 | 32,5 | 35,5 | 57,5 | 48 | 28 | 6,6 | 6 | 14 | 9 | 0,8 | 0,24 |
| **27850-2402315** | 22,5 | 15 | 38,5 | 26 | 48 | 28 | 6,6 | 6 | 14 | 9 | 0,65 | 0,425 |
| **27850-2402318** | 22,5 | 17,5 | 38,5 | 29,5 | 48 | 28 | 6,6 | 6 | 14 | 9 | 0,75 | 0,5 |
| **27850-2402320** | 22,5 | 20 | 38,5 | 35,5 | 48 | 28 | 6,6 | 6 | 14 | 9 | 0,75 | 0,4 |
| **27850-2402323** | 22,5 | 22,5 | 38,5 | 38,5 | 48 | 28 | 6,6 | 6 | 14 | 9 | 0,8 | 0,35 |

| Order No. | A1 | A2 | A3 | A4 | B1 | B2 | D1 | D2 | D3 | H | F1 max. kN | F2 max. kN |
|---|---|---|---|---|---|---|---|---|---|---|---|---|
| **27850-2402325** | 22,5 | 25 | 38,5 | 43,5 | 48 | 28 | 6,6 | 6 | 14 | 9 | 0,8 | 0,35 |
| **27850-2402328** | 22,5 | 27,5 | 38,5 | 48,5 | 48 | 28 | 6,6 | 6 | 14 | 9 | 0,8 | 0,35 |
| **27850-2402333** | 22,5 | 32,5 | 38,5 | 57,5 | 48 | 28 | 6,6 | 6 | 14 | 9 | 0,8 | 0,24 |
| **27850-2452515** | 25 | 15 | 43,5 | 26 | 48 | 28 | 6,6 | 6 | 14 | 9 | 0,65 | 0,425 |
| **27850-2452518** | 25 | 17,5 | 43,5 | 29,5 | 48 | 28 | 6,6 | 6 | 14 | 9 | 0,75 | 0,5 |
| **27850-2452520** | 25 | 20 | 43,5 | 35,5 | 48 | 28 | 6,6 | 6 | 14 | 9 | 0,7 | 0,4 |
| **27850-2452523** | 25 | 22,5 | 43,5 | 38,5 | 48 | 28 | 6,6 | 6 | 14 | 9 | 0,8 | 0,35 |
| **27850-2452525** | 25 | 25 | 43,5 | 43,5 | 48 | 28 | 6,6 | 6 | 14 | 9 | 0,8 | 0,325 |
| **27850-2452528** | 25 | 27,5 | 43,5 | 48,5 | 48 | 28 | 6,6 | 6 | 14 | 9 | 0,8 | 0,32 |
| **27850-2452533** | 25 | 32,5 | 43,5 | 57,5 | 48 | 28 | 6,6 | 6 | 14 | 9 | 0,8 | 0,24 |
| **27850-2502815** | 27,5 | 15 | 48,5 | 26 | 48 | 28 | 6,6 | 6 | 14 | 9 | 0,65 | 0,425 |
| **27850-2502818** | 27,5 | 17,5 | 48,5 | 29,5 | 48 | 28 | 6,6 | 6 | 14 | 9 | 0,75 | 0,5 |
| **27850-2502820** | 27,5 | 20 | 48,5 | 35,5 | 48 | 28 | 6,6 | 6 | 14 | 9 | 0,7 | 0,4 |
| **27850-2502823** | 27,5 | 22,5 | 48,5 | 38,5 | 48 | 28 | 6,6 | 6 | 14 | 9 | 0,8 | 0,35 |
| **27850-2502825** | 27,5 | 25 | 48,5 | 43,5 | 48 | 28 | 6,6 | 6 | 14 | 9 | 0,8 | 0,325 |
| **27850-2502828** | 27,5 | 27,5 | 48,5 | 48,5 | 48 | 28 | 6,6 | 6 | 14 | 9 | 0,8 | 0,32 |
| **27850-2502833** | 27,5 | 32,5 | 48,5 | 57,5 | 48 | 28 | 6,6 | 6 | 14 | 9 | 0,8 | 0,24 |
| **27850-2603315** | 32,5 | 15 | 57,5 | 26 | 48 | 28 | 6,6 | 6 | 14 | 9 | 0,65 | 0,425 |
| **27850-2603318** | 32,5 | 17,5 | 57,5 | 29,5 | 48 | 28 | 6,6 | 6 | 14 | 9 | 0,75 | 0,5 |
| **27850-2603320** | 32,5 | 20 | 57,5 | 35,5 | 48 | 28 | 6,6 | 6 | 14 | 9 | 0,7 | 0,4 |
| **27850-2603323** | 32,5 | 22,5 | 57,5 | 38,5 | 48 | 28 | 6,6 | 6 | 14 | 9 | 0,8 | 0,35 |
| **27850-2603325** | 32,5 | 25 | 57,5 | 43,5 | 48 | 28 | 6,6 | 6 | 14 | 9 | 0,8 | 0,325 |
| **27850-2603328** | 32,5 | 27,5 | 57,5 | 48,5 | 48 | 28 | 6,6 | 6 | 14 | 9 | 0,9 | 0,32 |
| **27850-2603333** | 32,5 | 32,5 | 57,5 | 57,5 | 48 | 28 | 6,6 | 6 | 14 | 9 | 0,9 | 0,24 |

# Hinges

plastic

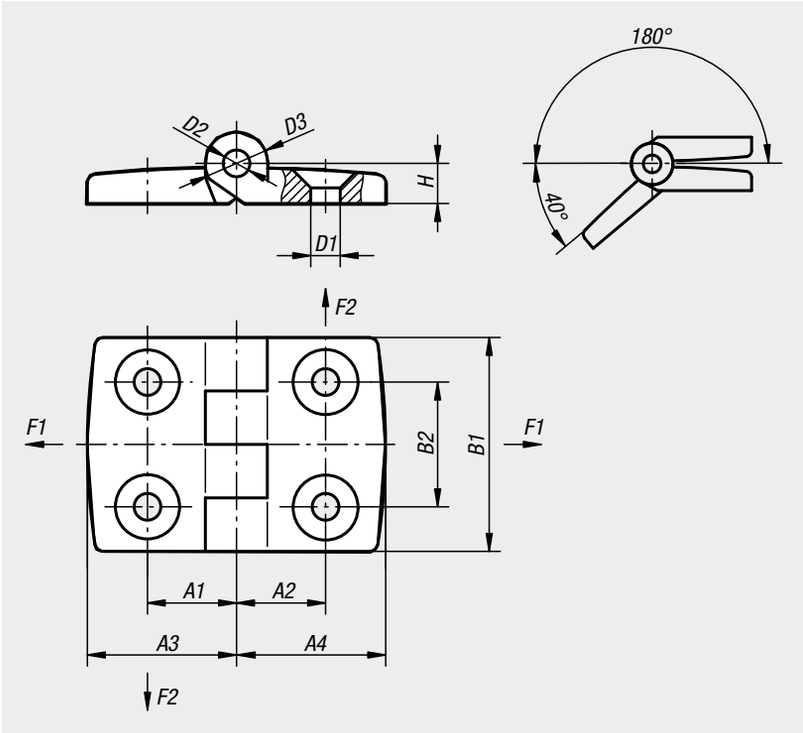


**Material:**
Fibreglass reinforced thermoplastic.
Hinge pin stainless steel.

**Version:**
Hinge black. Pin bright.

**Sample order:**
nlm 27852-251528

**Note:**
Unequal leaf hinges can be mounted left or right.
All hinges can be supplied on request with guide tabs for the slots of aluminium profiles (slots 6, 8 and 10). They facilitate mounting, secure the hinge against twisting and make it stronger.

| Order No. | A1 | A2 | A3 | A4 | B1 | B2 | D1 | D2 | D3 | H | F1 max. kN | F2 max. kN |
|---|---|---|---|---|---|---|---|---|---|---|---|---|
| **27852-201212** | 11,5 | 11,5 | 19,5 | 19,5 | 30 | 14 | 4,2 | 3 | 8 | 5,5 | 0,4 | 0,2 |
| **27852-251515** | 15 | 15 | 26 | 26 | 48 | 28 | 6,6 | 6 | 14 | 9 | 0,625 | 0,425 |
| **27852-251518** | 15 | 17,5 | 26 | 29,5 | 48 | 28 | 6,6 | 6 | 14 | 9 | 0,7 | 0,5 |
| **27852-251520** | 15 | 20 | 26 | 35,5 | 48 | 28 | 6,6 | 6 | 14 | 9 | 0,7 | 0,4 |
| **27852-251523** | 15 | 22,5 | 26 | 38,5 | 48 | 28 | 6,6 | 6 | 14 | 9 | 0,8 | 0,35 |
| **27852-251525** | 15 | 25 | 26 | 43,5 | 48 | 28 | 6,6 | 6 | 14 | 9 | 0,8 | 0,325 |
| **27852-251528** | 15 | 27,5 | 26 | 48,5 | 48 | 28 | 6,6 | 6 | 14 | 9 | 0,8 | 0,32 |
| **27852-251533** | 15 | 32,5 | 26 | 57,5 | 48 | 28 | 6,6 | 6 | 14 | 9 | 0,8 | 0,24 |
| **27852-301818** | 17,5 | 17,5 | 29,5 | 29,5 | 48 | 28 | 6,6 | 6 | 14 | 9 | 0,7 | 0,4 |
| **27852-301820** | 17,5 | 20 | 29,5 | 35,5 | 48 | 28 | 6,6 | 6 | 14 | 9 | 0,7 | 0,4 |
| **27852-301823** | 17,5 | 22,5 | 29,5 | 38,5 | 48 | 28 | 6,6 | 6 | 14 | 9 | 0,75 | 0,45 |
| **27852-301825** | 17,5 | 25 | 29,5 | 43,5 | 48 | 28 | 6,6 | 6 | 14 | 9 | 0,75 | 0,45 |
| **27852-301828** | 17,5 | 27,5 | 29,5 | 48,5 | 48 | 28 | 6,6 | 6 | 14 | 9 | 0,9 | 0,425 |
| **27852-301833** | 17,5 | 32,5 | 29,5 | 57,5 | 48 | 28 | 6,6 | 6 | 14 | 9 | 0,85 | 0,2 |
| **27852-352020** | 20 | 20 | 35,5 | 35,5 | 48 | 28 | 6,6 | 6 | 14 | 9 | 0,7 | 0,4 |
| **27852-352023** | 20 | 22,5 | 35,5 | 38,5 | 48 | 28 | 6,6 | 6 | 14 | 9 | 0,75 | 0,45 |
| **27852-352025** | 20 | 25 | 35,5 | 43,5 | 48 | 28 | 6,6 | 6 | 14 | 9 | 0,75 | 0,45 |
| **27852-352028** | 20 | 27,5 | 35,5 | 48,5 | 48 | 28 | 6,6 | 6 | 14 | 9 | 0,8 | 0,425 |
| **27852-352033** | 20 | 32,5 | 35,5 | 57,5 | 48 | 28 | 6,6 | 6 | 14 | 9 | 0,8 | 0,175 |
| **27852-402323** | 22,5 | 22,5 | 38,5 | 38,5 | 48 | 28 | 6,6 | 6 | 14 | 9 | 0,75 | 0,45 |
| **27852-402325** | 22,5 | 25 | 38,5 | 43,5 | 48 | 28 | 6,6 | 6 | 14 | 9 | 0,75 | 0,45 |
| **27852-402328** | 22,5 | 27,5 | 38,5 | 48,5 | 48 | 28 | 6,6 | 6 | 14 | 9 | 0,8 | 0,425 |
| **27852-402333** | 22,5 | 32,5 | 38,5 | 57,5 | 48 | 28 | 6,6 | 6 | 14 | 9 | 0,85 | 0,175 |
| **27852-452525** | 25 | 25 | 43,5 | 43,5 | 48 | 28 | 6,6 | 6 | 14 | 9 | 0,75 | 0,45 |
| **27852-452528** | 25 | 27,5 | 43,5 | 48,5 | 48 | 28 | 6,6 | 6 | 14 | 9 | 0,8 | 0,425 |
| **27852-452533** | 25 | 32,5 | 43,5 | 57,5 | 48 | 28 | 6,6 | 6 | 14 | 9 | 0,85 | 0,2 |
| **27852-502828** | 27,5 | 27,5 | 48,5 | 48,5 | 48 | 28 | 6,6 | 6 | 14 | 9 | 0,8 | 0,425 |
| **27852-502833** | 27,5 | 32,5 | 48,5 | 57,5 | 48 | 28 | 6,6 | 6 | 14 | 9 | 0,85 | 0,2 |
| **27852-603333** | 32,5 | 32,5 | 57,5 | 57,5 | 48 | 28 | 6,6 | 6 | 14 | 9 | 0,85 | 0,175 |

# Hinges

plastic, with locking lever

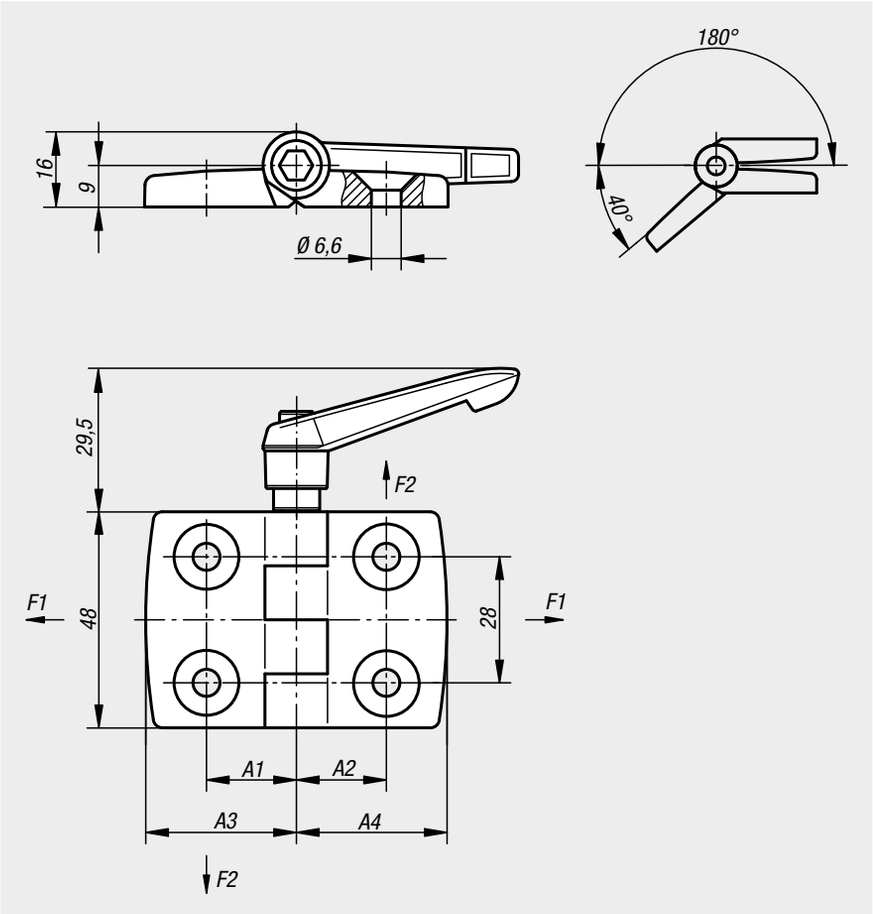


**Material:**
Hinge and lever fibreglass reinforced thermoplastic.
Hinge pin steel.
Mechanism steel.

**Version:**
Hinge black.
Pin galvanized.
Locking lever black.
Mechanism black galvanized.

**Sample order:**
nlm 27853-251515

**Note:**
The indexable lever allows the hinge to be locked in any position.

**On request:**
Hinges with guide tabs (slot 6, 8 and 10) for aluminium profiles.
Unequal leaf combinations.

| Order No. | A1 | A2 | A3 | A4 | F1 max. kN | F2 max. kN |
|---|---|---|---|---|---|---|
| **27853-251515** | 15 | 15 | 26 | 26 | 0,5 | 0,38 |
| **27853-301818** | 17,5 | 17,5 | 29,5 | 29,5 | 0,7 | 0,4 |
| **27853-352020** | 20 | 20 | 36 | 36 | 0,7 | 0,4 |
| **27853-402323** | 22,5 | 22,5 | 38,5 | 38,5 | 0,75 | 0,45 |
| **27853-452525** | 25 | 25 | 43,5 | 43,5 | 0,75 | 0,45 |
| **27853-502828** | 27,5 | 27,5 | 48,5 | 48,5 | 0,8 | 0,425 |
| **27853-603333** | 32,5 | 32,5 | 57,5 | 57,5 | 0,85 | 0,175 |

# Hinges

plastic, lift-off, with guide tabs

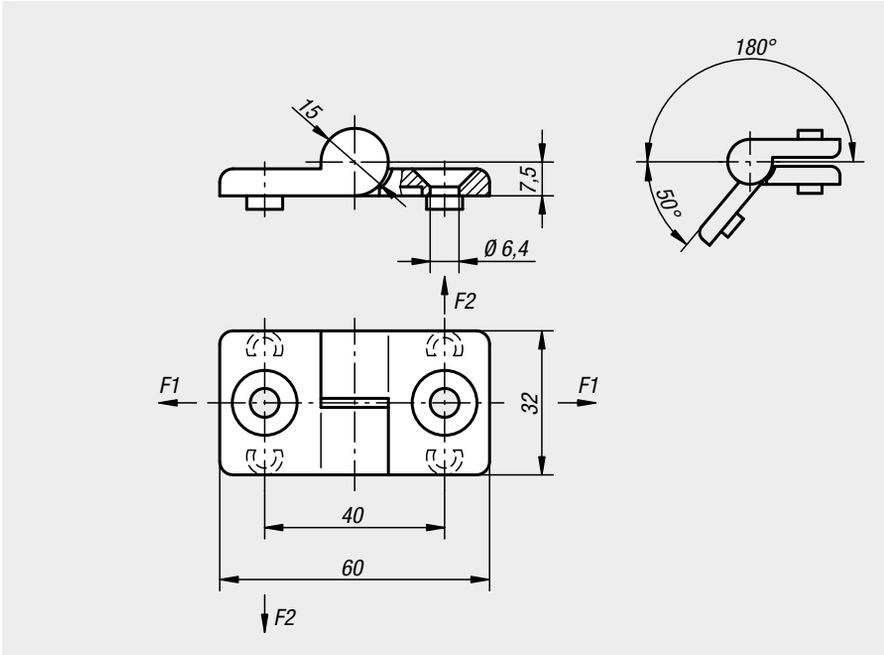


**Material:**
Fibreglass reinforced thermoplastic.
Hinge pin stainless steel.
Washer thermoplastic.

**Version:**
Hinge and washer black. Pin bright.

**Sample order:**
nlm 27856-1322020

**Note:**
The guide tabs permit the hinges to be mounted in slots (8 mm).

| Order No. | Version | F1 max. kN | F2 max. kN |
|---|---|---|---|
| **27856-1322020** | left | 0,2 | 0,1 |
| **27856-2322020** | right | 0,2 | 0,1 |

# Hinges

plastic, detent

**Material:**
Hinge and caps fibreglass reinforced PA thermoplastic.
Hinge pin stainless steel.

**Version:**
Hinge and caps black.
Pin bright.

**Sample order:**
nlm 27857-56181800

**Note:**
These hinges have a detent mechanism. This mechanism holds a door or lid open at three different angles or tightly closed. The hinges are available with or without guide tabs for aluminium profile slots.

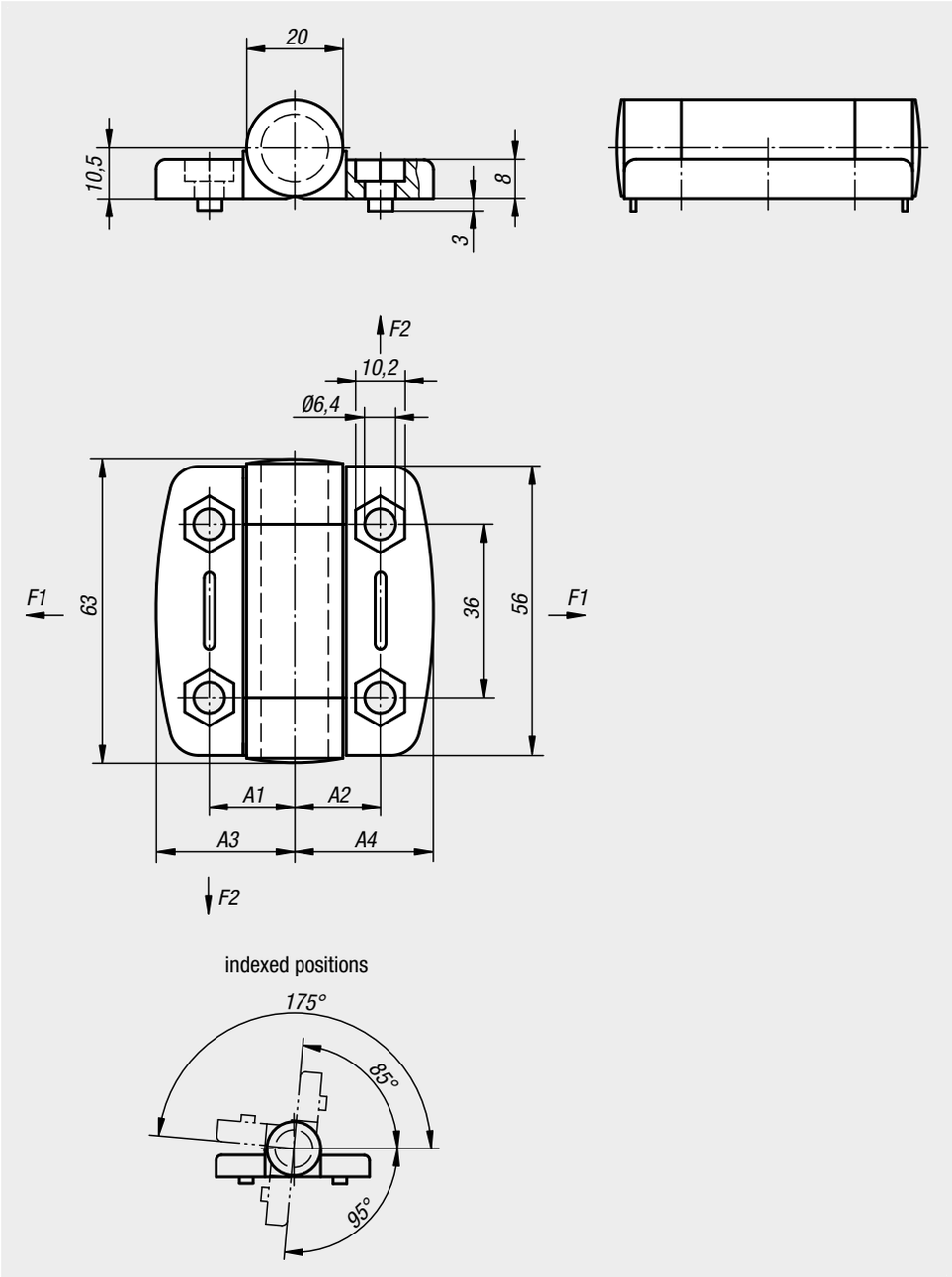


| Order No. | A1 | A2 | A3 | A4 | Guide tabs for slot | F1 max. kN | F2 max. kN |
|---|---|---|---|---|---|---|---|
| **27857-56181800** | 17,75 | 17,75 | 27 | 27 | - | 0,4 | 0,35 |
| **27857-56181806** | 17,75 | 17,75 | 27 | 27 | 6 | 0,4 | 0,35 |
| **27857-56181808** | 17,75 | 17,75 | 27 | 27 | 8 | 0,4 | 0,35 |
| **27857-56232300** | 22,75 | 22,75 | 36,75 | 36,75 | - | 0,6 | 0,425 |
| **27857-56232308** | 22,75 | 22,75 | 36,75 | 36,75 | 8 | 0,6 | 0,425 |
| **27857-56232310** | 22,75 | 22,75 | 36,75 | 36,75 | 10 | 0,6 | 0,425 |

# Hinges

## plastic, with adjustable friction

**Material:**
Hinge and caps, fibreglass reinforced PA thermoplastic.
Metal parts stainless steel.

**Version:**
Hinge and caps black.
Metal parts bright.

**Sample order:**
nlm 27858-56181800

**Note:**
These friction hinges allow doors or lids to remain open in any position. A set screw allows the amount of friction to be infinitely adjusted between 0-5 Nm. The hinges are available with or without guide tabs for aluminium profile slots.

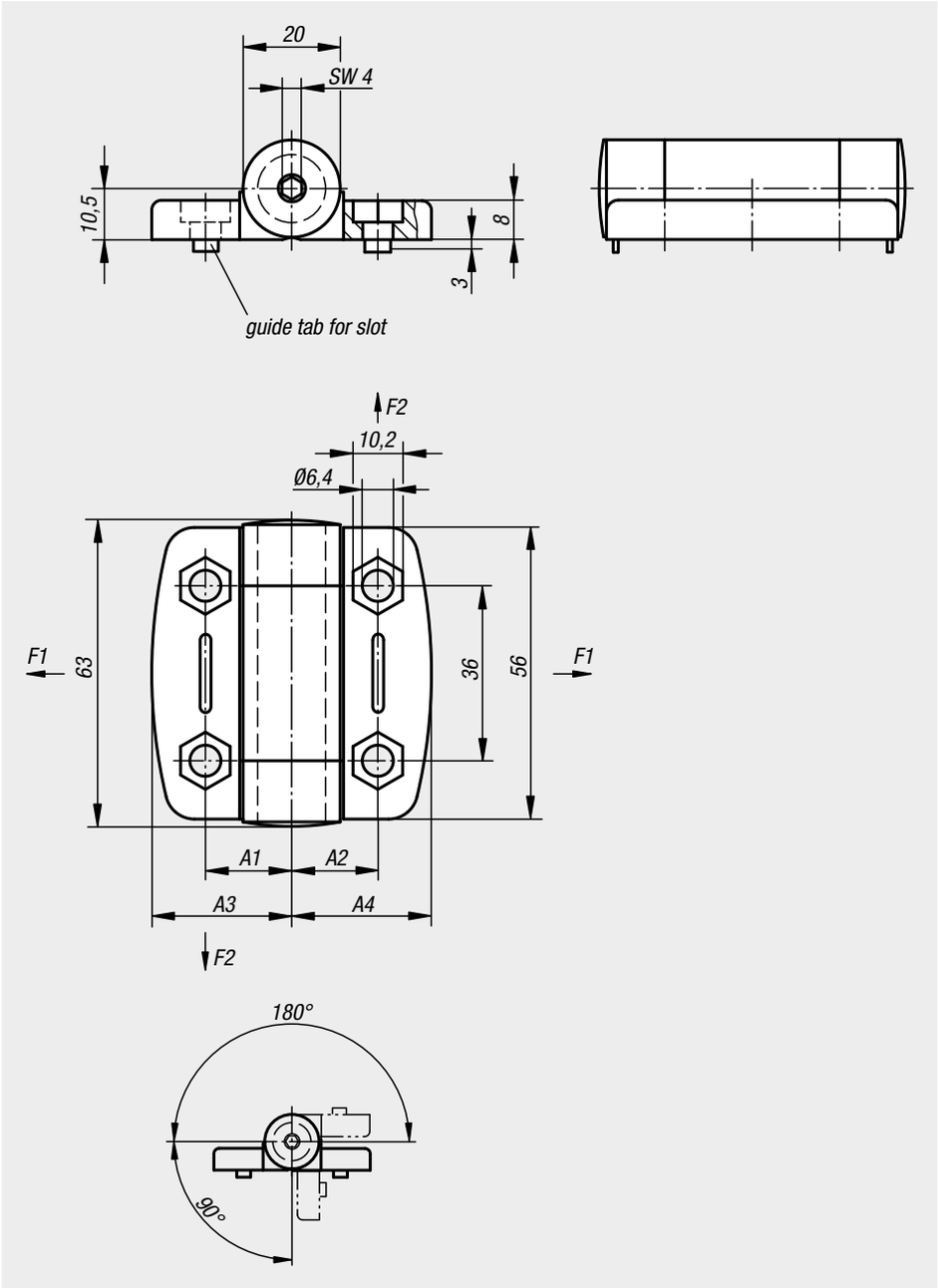

| Order No. | A1 | A2 | A3 | A4 | Guide tabs for slot | F1 max. kN | F2 max. kN |
|---|---|---|---|---|---|---|---|
| **27858-56181800** | 17,75 | 17,75 | 27 | 27 | - | 0,4 | 0,325 |
| **27858-56181806** | 17,75 | 17,75 | 27 | 27 | 6 | 0,4 | 0,325 |
| **27858-56181808** | 17,75 | 17,75 | 27 | 27 | 8 | 0,4 | 0,325 |
| **27858-56232300** | 22,75 | 22,75 | 36,75 | 36,75 | - | 0,6 | 0,425 |
| **27858-56232308** | 22,75 | 22,75 | 36,75 | 36,75 | 8 | 0,6 | 0,425 |
| **27858-56232310** | 22,75 | 22,75 | 36,75 | 36,75 | 10 | 0,6 | 0,425 |

# Hinges

## die-cast zinc, with elongated holes

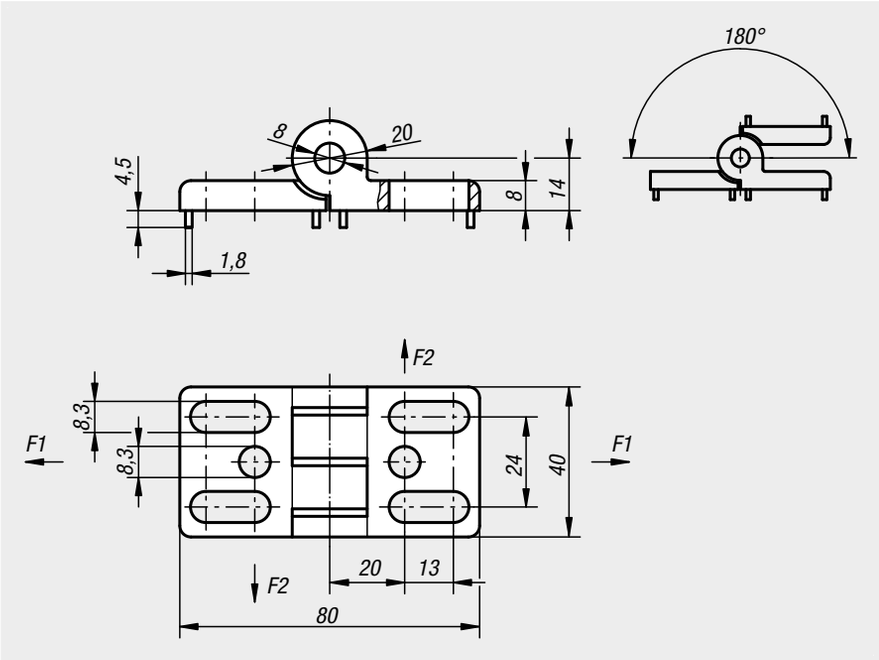


**Material:**
Die-cast zinc.
Hinge pin stainless steel.
Washer thermoplastic.

**Version:**
Hinge black powder-coated.
Pin bright.
Washer black.

**Sample order:**
nlm 27865-402020

**Note:**
Elongated holes allow easy horizontal adjustment.

| Order No. | Guide tabs for slot | F1 max. kN | F2 max. kN |
|---|---|---|---|
| **27865-402020** | - | 1,2 | 0,5 |
| **27865-40202008** | 8 | 1,2 | 0,5 |
| **27865-40202010** | 10 | 1,2 | 0,5 |

# Hinges

## die-cast zinc, with locking lever

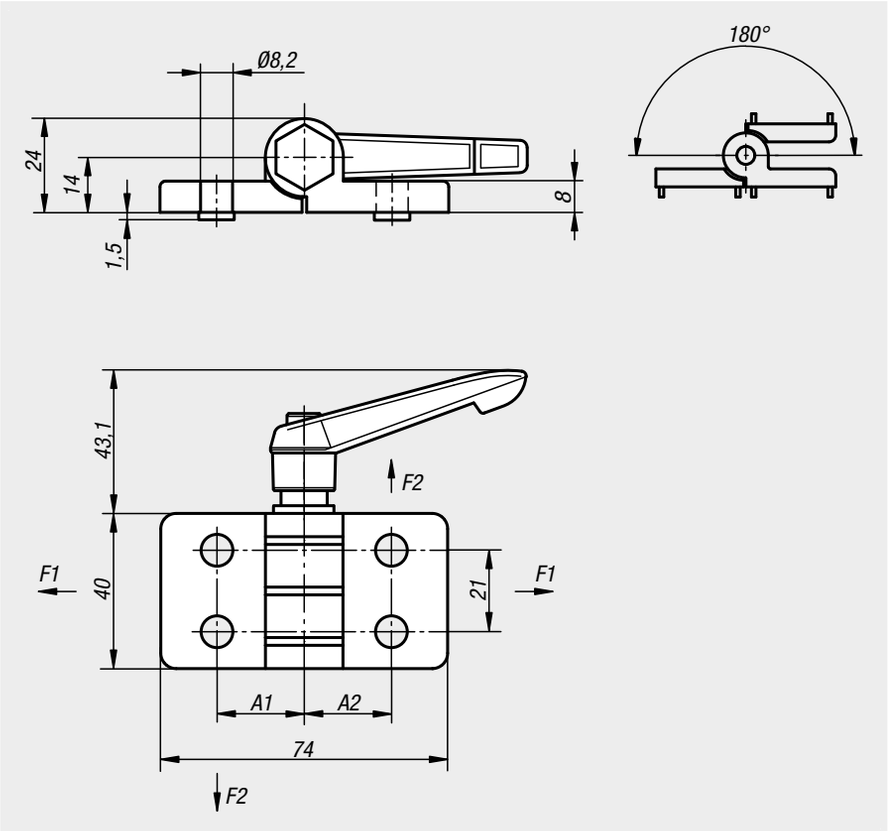


**Material:**
Hinge die-cast zinc.
Hinge pin steel.
Lever fibreglass reinforced thermoplastic.
Mechanism steel.

**Version:**
Hinge black powder-coated.
Pin galvanized.
Lever black.
Mechanism black galvanized.

**Sample order:**
nlm 27868-40232300

**Note:**
The indexable lever allows the hinge to be locked in any position.
Available with or without guide tabs for aluminium profile slots.

| Order No. | A1 | A2 | Guide tabs for slot | F1 max. kN | F2 max. kN |
|---|---|---|---|---|---|
| **27868-40232300** | 22,5 | 22,5 | - | 1,5 | 0,65 |
| **27868-40232308** | 22,5 | 22,5 | 8 | 1,5 | 0,65 |
| **27868-40232310** | 22,5 | 22,5 | 10 | 1,5 | 0,65 |
| **27868-40232500** | 22,5 | 25 | - | 1,5 | 0,65 |
| **27868-40232508** | 22,5 | 25 | 8 | 1,5 | 0,65 |
| **27868-40232510** | 22,5 | 25 | 10 | 1,5 | 0,65 |
| **27868-45252500** | 25 | 25 | - | 1,5 | 0,65 |
| **27868-45252508** | 25 | 25 | 8 | 1,5 | 0,65 |
| **27868-45252510** | 25 | 25 | 10 | 1,5 | 0,65 |

# Hinges

aluminium, lift-off, left

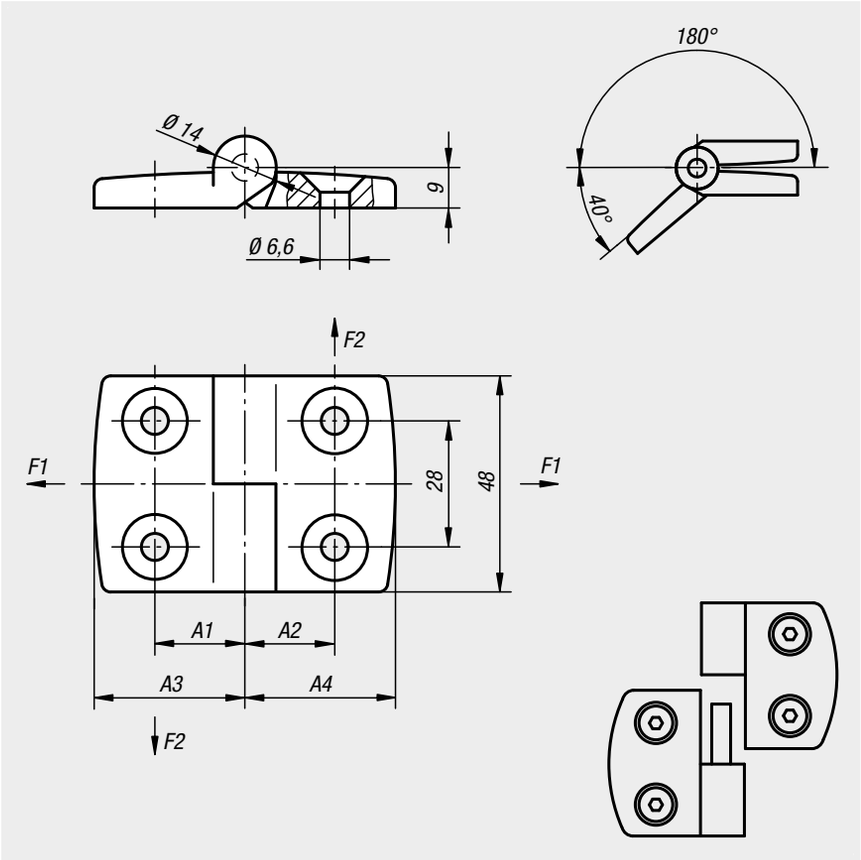


**Material:**
Die-cast aluminium.
Hinge pin stainless steel.

**Version:**
Hinge matt nickel-plated.
Pin bright.

**Sample order:**
nlm 27870-1251515

**Note:**
Hinges for panel elements and aluminium profiles.
The hinges can be fitted with a plastic spacer ring on the hinge pin.

**On request:**
Hinges with guide tabs for aluminium profiles (slots 5, 6, 8, 10, 12 and 14).
Unequal leaf combinations.

| Order No. | A1 | A2 | A3 | A4 | F1 max. kN | F2 max. kN |
|---|---|---|---|---|---|---|
| **27870-1251515** | 15 | 15 | 26 | 26 | 0,41 | 0,25 |
| **27870-1301818** | 17,5 | 17,5 | 29,5 | 29,5 | 0,45 | 0,28 |
| **27870-1352020** | 20 | 20 | 36 | 36 | 0,5 | 0,25 |
| **27870-1402323** | 22,5 | 22,5 | 38,5 | 38,5 | 0,55 | 0,2 |
| **27870-1452525** | 25 | 25 | 43,5 | 43,5 | 0,55 | 0,2 |
| **27870-1502828** | 27,5 | 27,5 | 48,5 | 48,5 | 0,55 | 0,175 |
| **27870-1603333** | 32,5 | 32,5 | 57,5 | 57,5 | 0,575 | 0,15 |

# Hinges

aluminium, lift-off, right

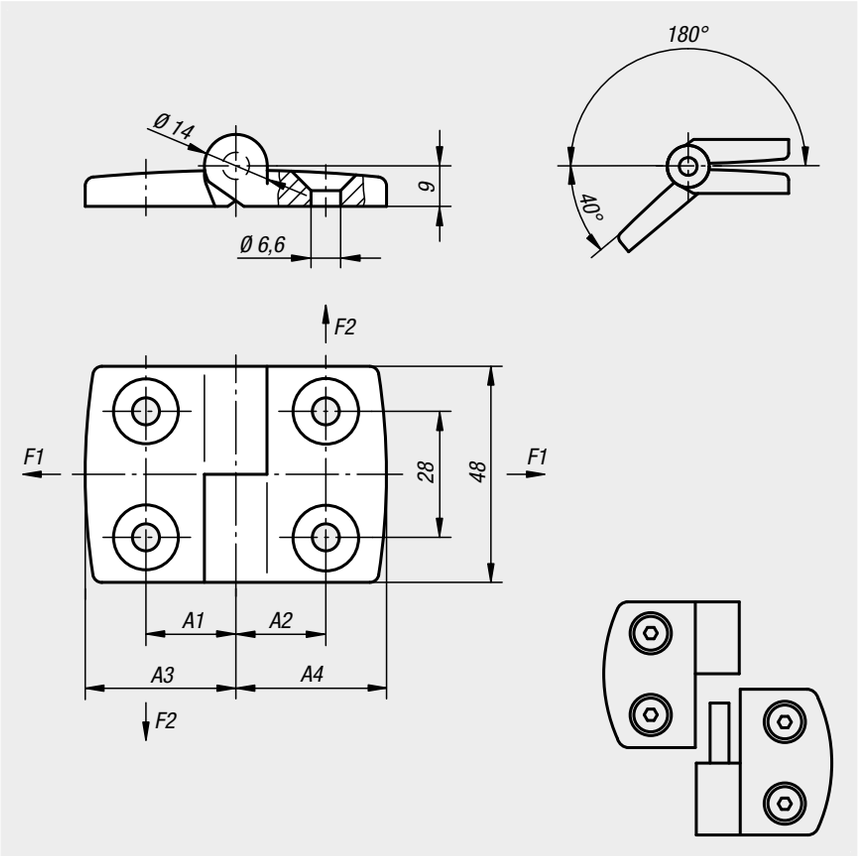


**Material:**
Die-cast aluminium.
Hinge pin stainless steel.

**Version:**
Hinge matt nickel-plated.
Pin bright.

**Sample order:**
nlm 27870-2251515

**Note:**
Hinges for panel elements and aluminium profiles.
The hinges can be fitted with a plastic spacer ring on the hinge pin.

**On request:**
Hinges with guide tabs for aluminium profiles (slots 5, 6, 8, 10, 12 and 14).
Unequal leaf combinations.

| Order No. | A1 | A2 | A3 | A4 | F1 max. kN | F2 max. kN |
|---|---|---|---|---|---|---|
| **27870-2251515** | 15 | 15 | 26 | 26 | 0,41 | 0,25 |
| **27870-2301818** | 17,5 | 17,5 | 29,5 | 29,5 | 0,45 | 0,28 |
| **27870-2352020** | 20 | 20 | 36 | 36 | 0,5 | 0,25 |
| **27870-2402323** | 22,5 | 22,5 | 38,5 | 38,5 | 0,55 | 0,2 |
| **27870-2452525** | 25 | 25 | 43,5 | 43,5 | 0,55 | 0,2 |
| **27870-2502828** | 27,5 | 27,5 | 48,5 | 48,5 | 0,55 | 0,175 |
| **27870-2603333** | 32,5 | 32,5 | 57,5 | 57,5 | 0,575 | 0,15 |

# Hinges

aluminium

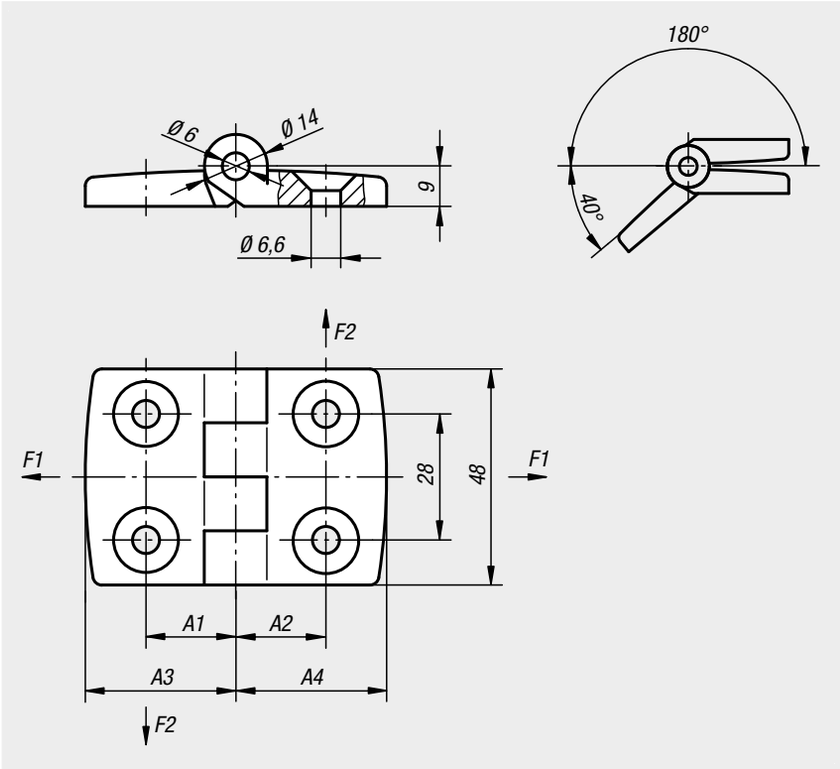


**Material:**
Die-cast aluminium.
Hinge pin stainless steel.

**Version:**
Hinge matt nickel-plated.
Pin bright.

**Sample order:**
nlm 27872-251515

**Note:**
Hinges for panel elements and aluminium profiles, non lift-off.
The hinges can be fitted with a plastic spacer on the hinge pin.

**On request:**
Hinges with guide tabs for aluminium profiles (slots 5, 6, 8, 10, 12 and 14).
Unequal leaf combinations.

| Order No. | A1 | A2 | A3 | A4 | F1 max. kN | F2 max. kN |
|---|---|---|---|---|---|---|
| **27872-251515** | 15 | 15 | 26 | 26 | 0,275 | 0,215 |
| **27872-301818** | 17,5 | 17,5 | 29,5 | 29,5 | 0,325 | 0,225 |
| **27872-352020** | 20 | 20 | 36 | 36 | 0,325 | 0,225 |
| **27872-402323** | 22,5 | 22,5 | 38,5 | 38,5 | 0,4 | 0,25 |
| **27872-452525** | 25 | 25 | 43,5 | 43,5 | 0,4 | 0,25 |
| **27872-502828** | 27,5 | 27,5 | 48,5 | 48,5 | 0,4 | 0,25 |
| **27872-603333** | 32,5 | 32,5 | 57,5 | 57,5 | 0,4 | 0,1 |

# 27000

## Base elements

# Modular structure of a swivel foot

**Application:**
Swivel feet are of modular design. The components can be individually combined to match the application. The swivel feet are applicable for use on machines, plants and even office furniture.

**Modular design:**
Swivel feet consist of two components - a plate and a threaded spindle or ball joint. **Any** plate can be combined with **any** threaded spindle or ball joint (see Figure 1).

**Assembly:**
Using a plastic hammer, knock the ball of the threaded spindle or ball joint vertically into the swivel foot plate. If necessary, the two fastening holes (closed) in the swivel foot plate can be opened by simply punching them out to allow the swivel foot to be fastened to a base.

**Height of swivel foot:**
Swivel feet always have a minimum height of H = 22.5 mm independently of the plate, threaded spindle or ball joint size (see Figure 2). When assembling with threaded spindle, the height of the complete swivel foot is calculated by adding 22.5 mm to the length of the threaded spindle + the height of the hexagon. (Total height of swivel foot = L + L1 + 22.5 mm).

When assembling with ball joint, the length L is void.

**Note for ordering:**
If the swivel foot plate and the threaded spindle or ball joint are to be supplied assembled, please add the suffix **"assembled"** to the order number for the plate and the spindle or ball joint (see sample order on the relevant product page).

Fig. 1

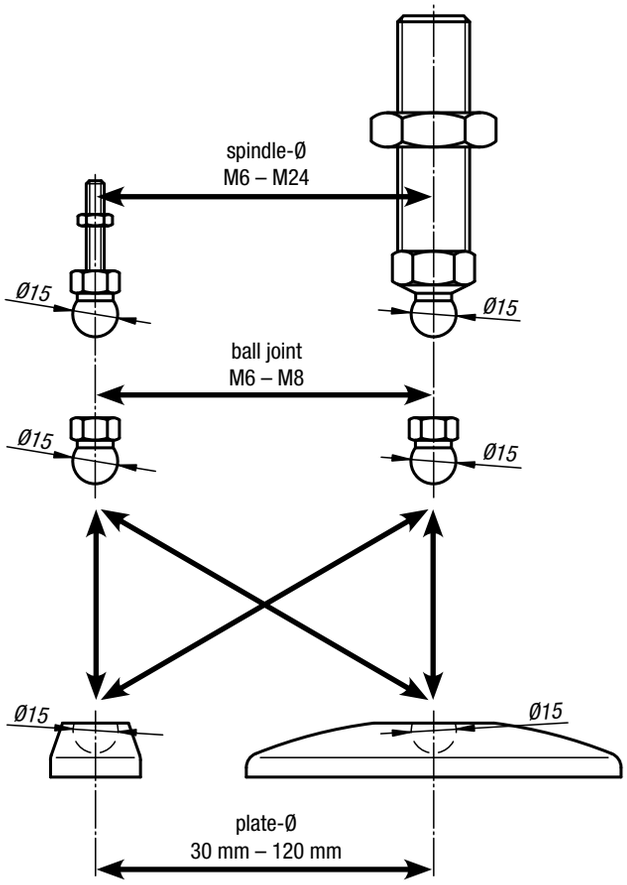


Fig. 2

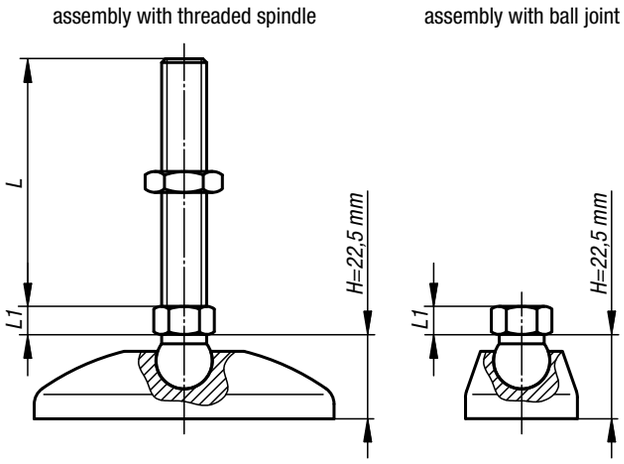


**Inclination angle of threaded spindle or ball joint:**

# Swivel feet plates

plastic

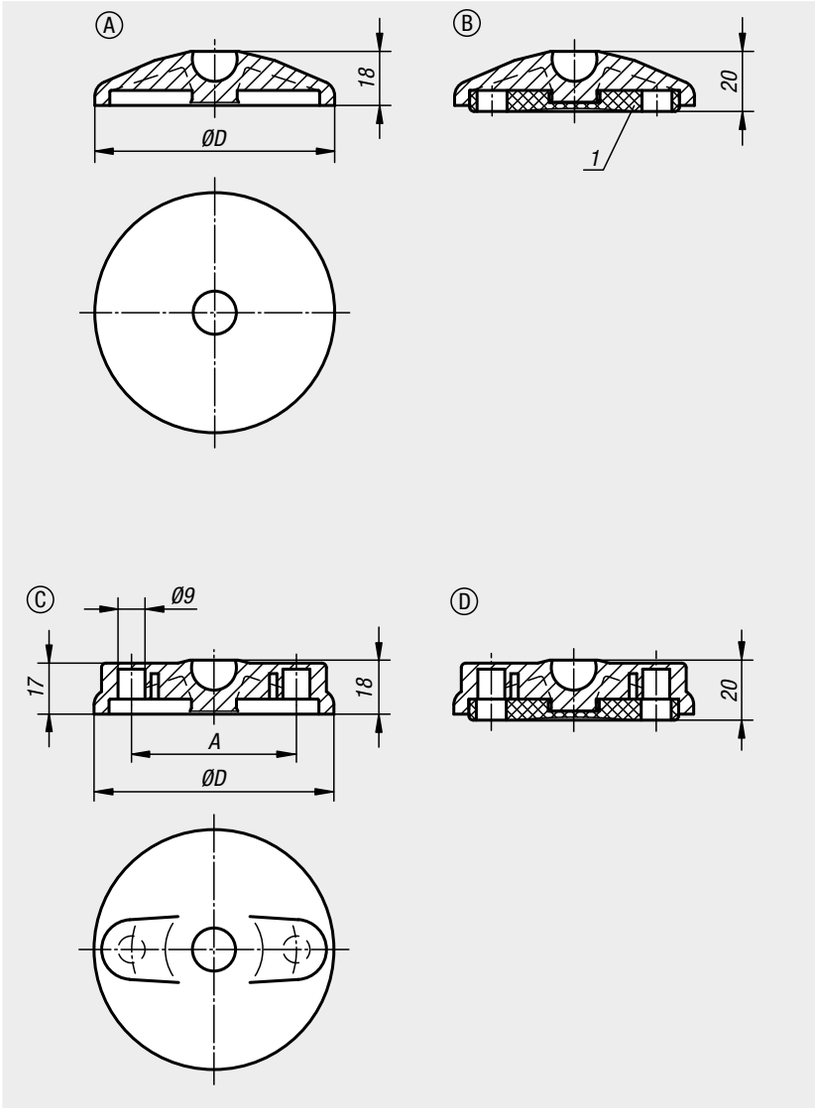


**Material:**
Plates, thermoplastic, glass bead reinforced.
Anti-slip plate thermoplastic elastomer.

**Version:**
black.

**Sample order:**
nlm 27800-1030
nlm 27800-1030 and 27810-060151 **assembled**

**Note for ordering:**
If the swivel foot plate and the threaded spindle or ball joint are to be supplied assembled, please add the suffix **"assembled"** to the order number for the plate and the spindle or ball joint. (e.g. 27800-1030 and 27810-060151 **assembled**.)

**Note:**
Swivel feet consist of a plate and a threaded spindle or ball joint. Any plate can be combined with any threaded spindle or ball joint. The anti-slip plate absorbs vibrations and prevents the swivel foot slipping.
For matching threaded spindles see 27810.
For matching ball joints see 27811.

**Drawing reference:**
1) From plate Ø 80
Form A without screw-on hole, without anti-slip plate
Form B without screw-on hole, with anti-slip plate
Form C with screw-on hole (closed), without anti-slip plate
Form D with screw-on hole (closed), with anti-slip plate

| Order No. Form A | Order No. Form B | D | Load rating max. kN |
|---|---|---|---|
| **27800-1030** | **27800-2030** | 30 | 5 |
| **27800-1040** | **27800-2040** | 40 | 9 |
| **27800-1045** | **27800-2045** | 45 | 9 |
| **27800-1050** | **27800-2050** | 50 | 9 |
| **27800-1060** | **27800-2060** | 60 | 9 |
| **27800-1080** | **27800-2080** | 80 | 9 |
| **27800-1100** | **27800-2100** | 100 | 9 |

| Order No. Form C | Order No. Form D | D | A | Load rating max. kN |
|---|---|---|---|---|
| **27800-3080** | **27800-4080** | 80 | 55 | 9 |
| **27800-3100** | **27800-4100** | 100 | 74 | 9 |
| **27800-3120** | **27800-4120** | 120 | 94 | 9 |

# Swivel feet plates

die-cast zinc or stainless steel

**Material:**
Plate die-cast zinc or stainless steel 1.4305.
Anti-slip plate thermoplastic elastomer.

**Version:**
Die-cast zinc plate, black powder-coated.
Stainless steel plate, bright.

**Sample order:**
nlm 27801-10301
nlm 27801-10301 and 27810-060151 **assembled**

**Note for ordering:**
If the swivel foot plate and the threaded spindle or ball joint are to be supplied assembled, please add the suffix **"assembled"** to the order number for the plate and the spindle or ball joint. (e.g. 27801-10301 and 27810-060151 **assembled**).

**Note:**
Swivel feet consist of a plate and a threaded spindle or ball joint. Any plate can be combined with any threaded spindle or ball joint. The anti-slip plate absorbs vibrations and prevents the swivel foot slipping.
For matching threaded spindles see 27810.
For matching ball joints see 27811.

**Drawing reference:**
1) From plate Ø 80
Form A without screw-on hole, without anti-slip plate
Form B without screw-on hole, with anti-slip plate
Form C with screw-on hole (open), without anti-slip plate
Form D with screw-on hole (open), with anti-slip plate

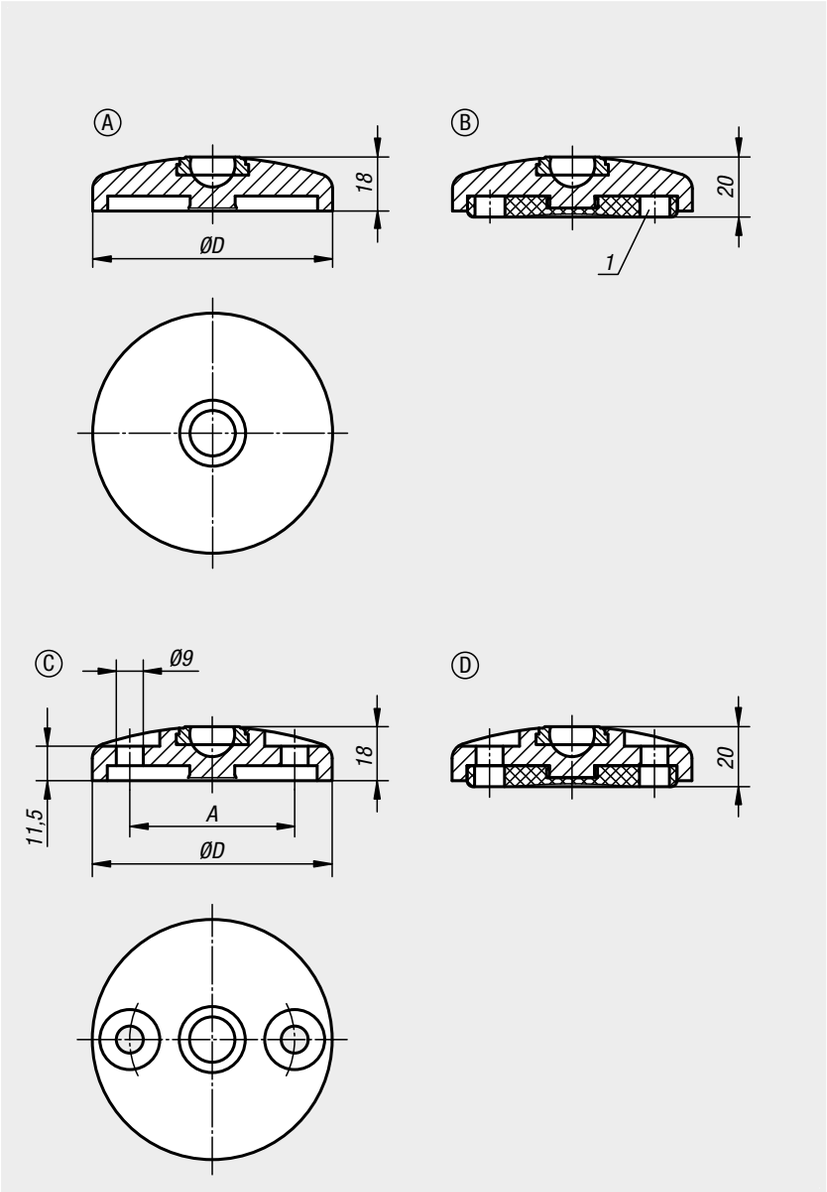

# Swivel feet plates

die-cast zinc or stainless steel

| Order No. Form A | Order No. Form B | Material base | D | Load rating max. kN |
|---|---|---|---|---|
| **27801-10301** | **27801-20301** | zinc | 30 | 20 |
| **27801-10401** | **27801-20401** | zinc | 40 | 30 |
| **27801-10451** | **27801-20451** | zinc | 45 | 30 |
| **27801-10501** | **27801-20501** | zinc | 50 | 30 |
| **27801-10601** | **27801-20601** | zinc | 60 | 30 |
| **27801-10801** | **27801-20801** | zinc | 80 | 30 |
| **27801-11001** | **27801-21001** | zinc | 100 | 35 |
| **27801-11201** | **27801-21201** | zinc | 120 | 35 |

| Order No. Form C | Order No. Form D | Material base | D | A | Load rating max. kN |
|---|---|---|---|---|---|
| **27801-30801** | **27801-40801** | zinc | 80 | 55 | 30 |
| **27801-31001** | **27801-41001** | zinc | 100 | 74 | 35 |
| **27801-31201** | **27801-41201** | zinc | 120 | 94 | 35 |

| Order No. Form A | Order No. Form B | Material base | D | Load rating max. kN |
|---|---|---|---|---|
| **27801-10302** | **27801-20302** | Stainless steel | 30 | 20 |
| **27801-10402** | **27801-20402** | Stainless steel | 40 | 30 |
| **27801-10452** | **27801-20452** | Stainless steel | 45 | 30 |
| **27801-10502** | **27801-20502** | Stainless steel | 50 | 35 |
| **27801-10602** | **27801-20602** | Stainless steel | 60 | 35 |
| **27801-10802** | **27801-20802** | Stainless steel | 80 | 35 |
| **27801-11002** | **27801-21002** | Stainless steel | 100 | 40 |
| **27801-11202** | **27801-21202** | Stainless steel | 120 | 40 |

| Order No. Form C | Order No. Form D | Material base | D | A | Load rating max. kN |
|---|---|---|---|---|---|
| **27801-30802** | **27801-40802** | Stainless steel | 80 | 55 | 35 |
| **27801-31002** | **27801-41002** | Stainless steel | 100 | 74 | 40 |
| **27801-31202** | **27801-41202** | Stainless steel | 120 | 94 | 40 |

# Swivel feet plates extended

die-cast zinc

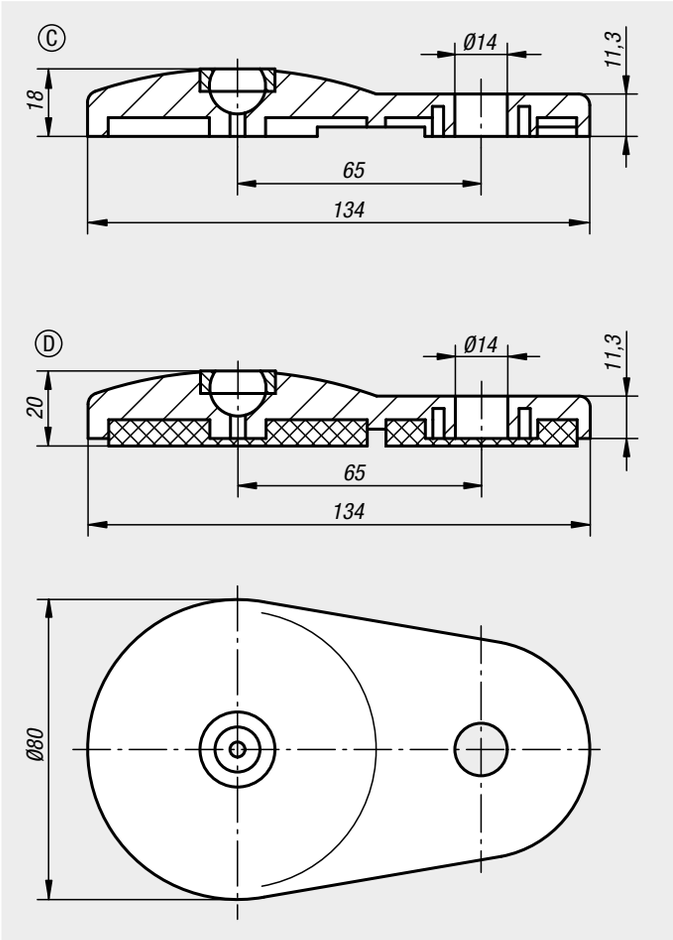


**Material:**
Plate die-cast zinc.
Anti-slip plate thermoplastic elastomer.

**Version:**
Plate black powder-coated.

**Sample order:**
nlm 27802-30801
nlm 27802-30801 and 27810-060151
**assembled**

**Note for ordering:**
If the swivel foot plate and the threaded spindle or ball joint are to be supplied assembled, please add the suffix **"assembled"** to the order number for the plate and the spindle or ball joint. (e.g. 27802-30801 and 27810-060151 **assembled**.)

**Note:**
Swivel feet consist of a plate and a threaded spindle or ball joint. Any plate can be combined with any threaded spindle or ball joint. The anti-slip plate absorbs vibrations and prevents the swivel foot slipping.
For matching threaded spindles see 27810.
For matching ball joints see 27811.

**Drawing reference:**
Form C with screw-on hole, without anti-slip plate
Form D with screw-on hole, with anti-slip plate

| Order No. | Form | Load rating max. kN |
|---|---|---|
| **27802-30801** | C | 30 |
| **27802-40801** | D | 30 |

# Swivel feet plates

stainless steel

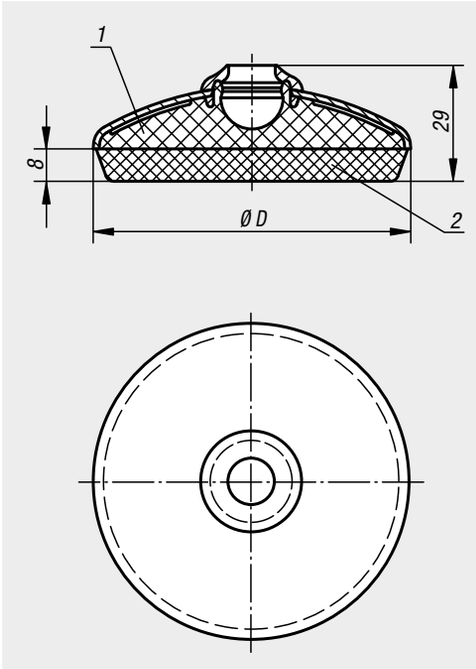


**Material:**
Plates, stainless steel 1.4301.
Core, thermoplastic PA.
Rubber support TPE.

**Version:**
Plate bright.
Rubber support light grey with sealing lip, hardness 70 Shore A.
Temp. range -20°C to +100°C.

**Sample order:**
nlm 27803-1060
nlm 27803-1060 and 27810-060152 **assembled**

**Note for ordering:**
If the swivel foot plate and the threaded spindle or ball joint are to be supplied assembled, please add the suffix **"assembled"** to the order number for the plate and the spindle or ball joint. (e.g. 27803-1060 and 27810-060152 **assembled**).

**Note:**
The rubber support is joined with the stainless steel plate and the PA core by injection moulding. The rubber support is resistant to oil and water (up to 60 °C). In addition, it is furnished with antibacterial and antimicrobial protection and is thus outstandingly suited for sectors in the foods industry.

Swivel feet consist of a plate and a threaded spindle or ball joint. Any plate can be combined with any threaded spindle or ball joint.
For matching threaded spindles see 27810.
For matching ball joints see 27811.

**Drawing reference:**
1) PA-core
2) rubber base

| Order No. | D | Load rating max. kN |
|---|---|---|
| **27803-1060** | 58,5 | 7 |
| **27803-1080** | 78,5 | 7 |
| **27803-1100** | 98,5 | 7 |

# Swivel feet threaded spindles

steel or stainless steel

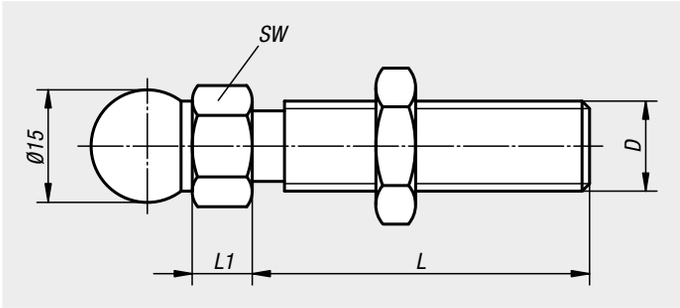


**Material:**
Steel or stainless steel 1.4301.

**Version:**
Steel blue chromed.
Stainless steel, bright.

**Sample order:**
nlm 27810-060151
nlm 27810-060151 and 27800-1030 **assembled**

**Note for ordering:**
If the threaded spindle and the plate are to be supplied assembled, please add the suffix **"assembled"** to the order number for the spindle and plate. (e.g. 27810-060151 and 27800-1030 assembled.)

**Note:**
Swivel feet consist of a plate and a threaded spindle. Any plate can be combined with any threaded spindle. The height of the complete swivel foot is calculated by the length of the threaded spindle + height of hexagon + 22.5 mm. (Overall height of swivel foot = L + L1 + 22.5 mm).

| Order No. Steel | Order No. Stainless steel | D | L | L1 | SW | Load rating max. kN |
|---|---|---|---|---|---|---|
| **27810-060151** | **27810-060152** | M6 | 15 | 7,5 | 14 | 2 |
| **27810-060301** | **27810-060302** | M6 | 30 | 7,5 | 14 | 2 |
| **27810-080401** | **27810-080402** | M8 | 40 | 7,5 | 14 | 3,5 |
| **27810-080801** | **27810-080802** | M8 | 80 | 7,5 | 14 | 3,5 |
| **27810-100451** | **27810-100452** | M10 | 45 | 7,5 | 14 | 4,7 |
| **27810-100701** | **27810-100702** | M10 | 70 | 7,5 | 14 | 4,7 |
| **27810-100901** | **27810-100902** | M10 | 90 | 7,5 | 14 | 4,7 |
| **27810-101251** | **27810-101252** | M10 | 125 | 7,5 | 14 | 4,7 |
| **27810-101501** | **27810-101502** | M10 | 150 | 7,5 | 14 | 4,7 |
| **27810-120451** | **27810-120452** | M12 | 45 | 7,5 | 14 | 7,7 |
| **27810-120661** | **27810-120662** | M12 | 66 | 7,5 | 14 | 7,7 |
| **27810-121001** | **27810-121002** | M12 | 100 | 7,5 | 14 | 7,7 |
| **27810-121251** | **27810-121252** | M12 | 125 | 7,5 | 14 | 7,7 |
| **27810-121501** | **27810-121502** | M12 | 150 | 7,5 | 14 | 7,7 |
| **27810-140661** | **27810-140662** | M14 | 66 | 7,5 | 14 | 11,1 |
| **27810-141001** | **27810-141002** | M14 | 100 | 7,5 | 14 | 11,1 |
| **27810-141251** | **27810-141252** | M14 | 125 | 7,5 | 14 | 11,1 |
| **27810-141501** | **27810-141502** | M14 | 150 | 7,5 | 14 | 11,1 |
| **27810-160661** | **27810-160662** | M16 | 66 | 7,5 | 17 | 14,5 |
| **27810-161001** | **27810-161002** | M16 | 100 | 7,5 | 17 | 14,5 |
| **27810-161251** | **27810-161252** | M16 | 125 | 7,5 | 17 | 14,5 |
| **27810-161501** | **27810-161502** | M16 | 150 | 7,5 | 17 | 14,5 |
| **27810-162001** | **27810-162002** | M16 | 200 | 7,5 | 17 | 14,5 |
| **27810-200851** | **27810-200852** | M20 | 85 | 10,5 | 22 | 24,3 |
| **27810-201001** | **27810-201002** | M20 | 100 | 10,5 | 22 | 24,3 |
| **27810-201251** | **27810-201252** | M20 | 125 | 10,5 | 22 | 24,3 |
| **27810-201501** | **27810-201502** | M20 | 150 | 10,5 | 22 | 24,3 |
| **27810-202001** | **27810-202002** | M20 | 200 | 10,5 | 22 | 24,3 |
| **27810-240851** | **27810-240852** | M24 | 85 | 10,5 | 24 | 36,1 |
| **27810-241001** | **27810-241002** | M24 | 100 | 10,5 | 24 | 36,1 |
| **27810-241251** | **27810-241252** | M24 | 125 | 10,5 | 24 | 36,1 |
| **27810-241501** | **27810-241502** | M24 | 150 | 10,5 | 24 | 36,1 |
| **27810-242001** | **27810-242002** | M24 | 200 | 10,5 | 24 | 36,1 |

# Levelling feet

## for aluminium profiles

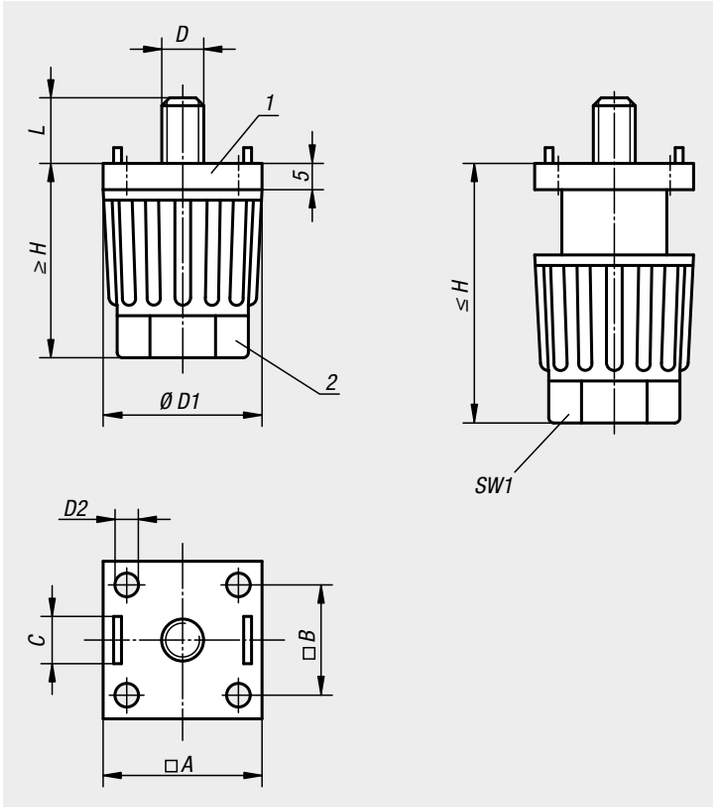


**Material:**
Body fibreglass reinforced thermoplastic.
Spindle and washer steel.

**Version:**
Body black.
Spindle and washer galvanized.

**Sample order:**
nlm 27840-300806

**Note:**
These levelling feet are suitable for tables and lighter installations. The foot height is adjusted by turning the base nut by hand or spanner. The pins on the top flange centre the foot and prevent it turning. These levelling feet can be attached to aluminium profiles using T-slot nuts, no need for drilling.

**Drawing reference:**
1) end part
2) nut

Side mounted in profile keyway
no drilling required when using a T-slot nut

Profile end mounted

| Order No. | A for aluminium profile | B | C for slot | D | D1 | D2 for countersunk screw | H min. - max. | L | SW1 | Load rating max. kN |
|---|---|---|---|---|---|---|---|---|---|---|
| **27840-300806** | 30 | 20,5 | 8 | M6 | 30 | M4 | 35-50 | 14 | 22 | 1,5 |
| **27840-300808** | 30 | 20,5 | 8 | M8 | 30 | M4 | 35-50 | 14 | 22 | 1,5 |
| **27840-301006** | 30 | 20,5 | 10 | M6 | 30 | M4 | 35-50 | 14 | 22 | 1,5 |
| **27840-301008** | 30 | 20,5 | 10 | M8 | 30 | M4 | 35-50 | 14 | 22 | 1,5 |
| **27840-400808** | 40 | 28 | 8 | M8 | 40 | M6 | 45-65 | 14 | 30 | 1,5 |
| **27840-401006** | 40 | 28 | 10 | M6 | 40 | M6 | 45-65 | 14 | 30 | 1,5 |
| **27840-401008** | 40 | 28 | 10 | M8 | 40 | M6 | 45-65 | 14 | 30 | 1,5 |

# Swivel and fixed castors

standard version

**Material:**
Housing steel plate.
Wheel treads solid rubber.
Wheel rims polyamide.

**Version:**
Housing press formed.
Double ball bearing in the castor head.
Plain bearing in wheels.

**Sample order:**
nlm 95010-07525

**Note:**
Wheel axle bolted.
Swivel and fixed castors with bolt hole.
Wheels grey, non-marking.

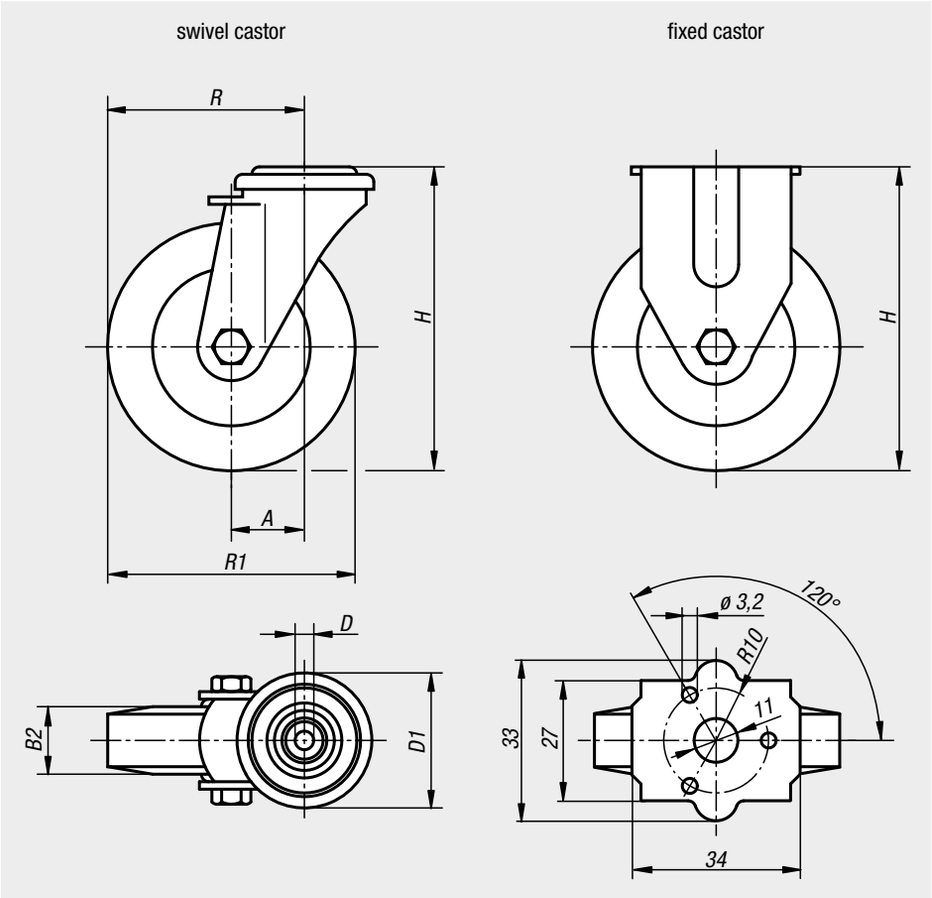


**wheel and swivel head brake**
**“stop-fix”**

swivel head bearing:

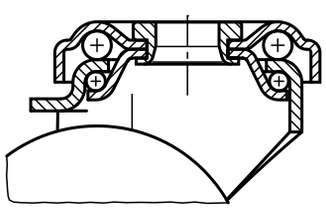

| Order No. swivel castors | Order No. fixed castors | Order No. Swivel castor with „stop-fix“ | Wheel bearing | A | B2 | D | D1 | H | R | R1 | Permissible load kg |
|---|---|---|---|---|---|---|---|---|---|---|---|
| **95010-05018** | **95010-050181** | **95010-050182** | Plain bearing | 25/- | 18 | 11/- | 43/- | 69 | 50/- | 50 | 40 |
| **95010-07525** | **95010-075251** | **95010-075252** | Plain bearing | 28/- | 25 | 11/- | 43/- | 98 | 65,5/- | 75 | 60 |
| **95010-10025** | **-** | **95010-100252** | Plain bearing | 33 | 25 | 11 | 43 | 121 | 83 | 100 | 70 |

WE10ENCAT1704

www.norelem.com