Item description/product images

Description

Material:
Housing and cam tool steel.
Grip carbon steel.
Ball knob thermoset PF 31.

Version:
Housing and cam hardened and black oxidised.
Grip black oxidised.
Ball knob black.

Note:
* Max. workpiece thickness see clamping pin 04400 (dimension C).
** Admissible hand force for the handle.

Accessory:
Standard handles 06355.
Screw-in handles with adjustable torque 06357.

Drawings

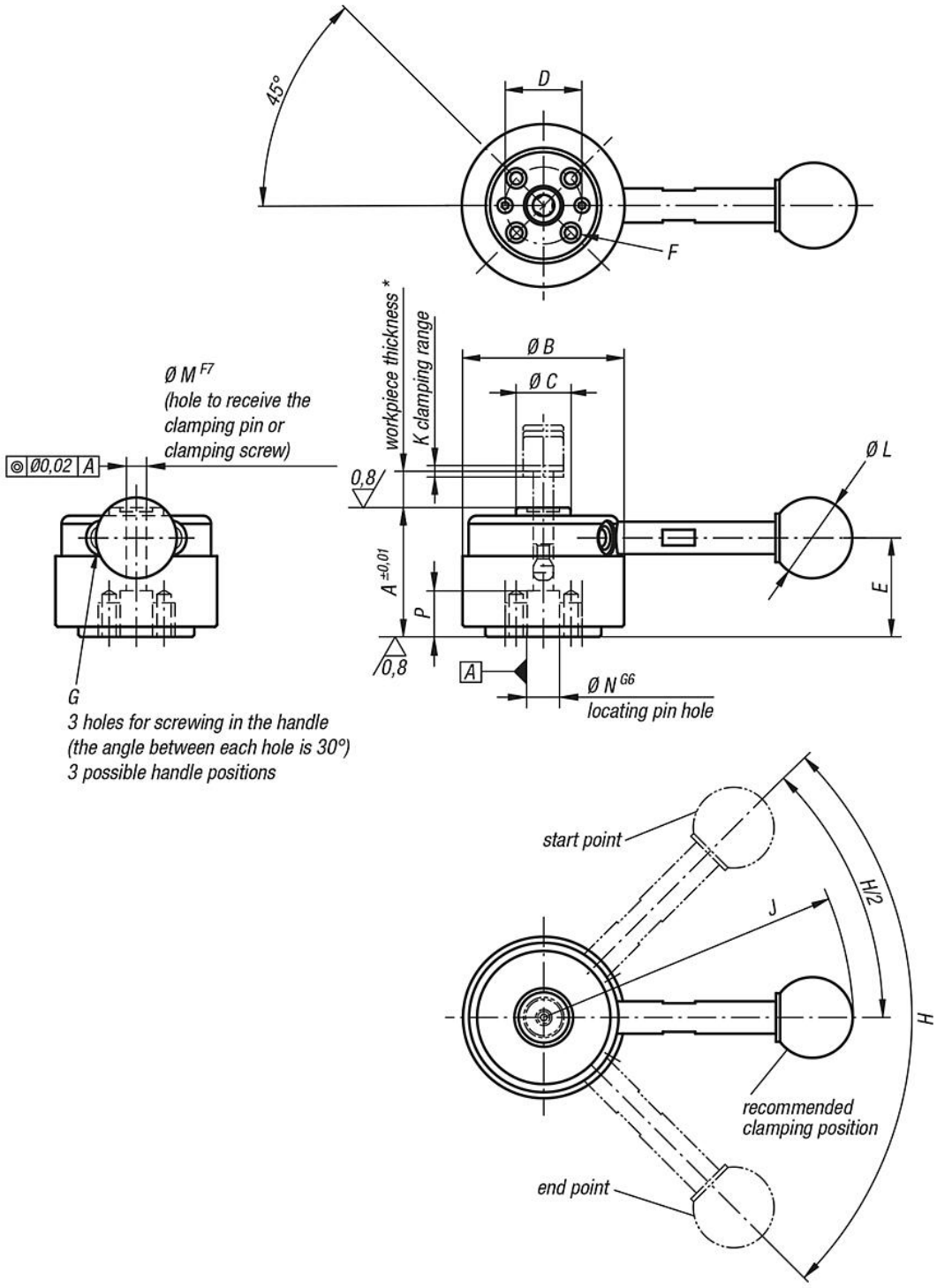

Overview of items

Order No.	Version 1	A	B	C	D	E	F	G	H	J	K	L	M	N	P	Clamping force N	Recommended workpiece thickness tolerance	Hand force FH N	Holding force N
04400-324000	without grip	32	40	13,5	18	24,5	M4x8	M5	90°	-	1,5	-	5	8	10	900	±0,3*	150**	2000
04400-324001	with grip	32	40	13,5	18	24,5	M4x8	M5	90°	76,5	1,5	20	5	8	10	900	±0,3*	150**	2000
04400-405000	without grip	40	50	18	25	30,7	M6x9	M6	110°	-	2	-	8	12	13	2500	±0,5*	200**	5500
04400-405001	with grip	40	50	18	25	30,7	M6x9	M6	110°	111,5	2	25	8	12	13	2500	±0,5*	200**	5500

Overview of items