Item description/product images

Description

Material:
Carbon steel.

Version:
Hoist ring with Envirolox® protective coating.
Washer chrome plated.

Note:
Every hoist ring undergoes an additional visual inspection after load testing (5x safety factor).
The new Envirolox® protective coating is environmentally friendly and is proven to be effective in extreme conditions.
Possible application areas: in corrosive atmospheres such as maritime freight, chemical industry etc.

Drawings

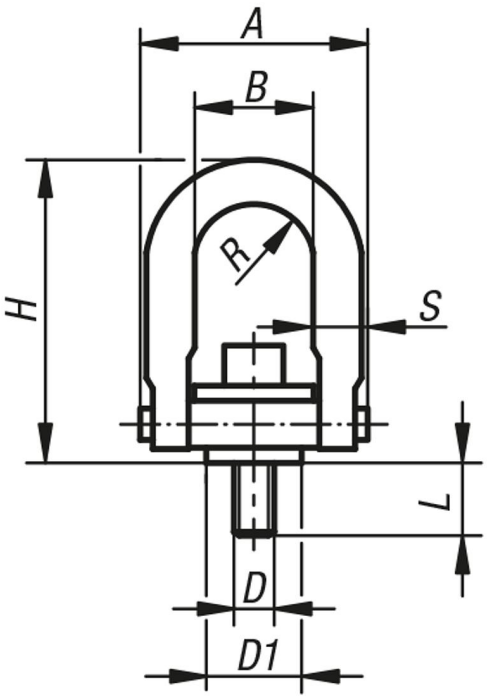

Overview of items

Order No.	A	B	D	D1	H	L	R	S	max. permissible load kg	Tightening torque Nm
07735-08	46,7	22	M8	19	67,8	12,5	10,9	9,7	400	9,81
07735-10	46,7	22	M10	19	67,8	17,5	10,9	9,7	450	16,7
07735-12	89,4	46	M12	38,1	121,4	19	22,4	19	1050	37,3
07735-16	89,4	46	M16	38,1	121,4	29	22,4	19	1900	80,4
07735-20	89,4	46	M20	38,1	121,4	34	22,4	19	2150	133

Overview of items

Order No.	A	B	D	D1	H	L	R	S	max. permissible load kg	Tightening torque Nm
07735-120	130,6	70	M20	58,7	165,6	32	35,6	25,4	3000	133
07735-24	130,6	70	M24	58,7	165,6	37	35,6	25,4	4200	304
07735-30	165,1	90	M30	81	221,7	46	44,5	31,7	7000	588