Item description/product images

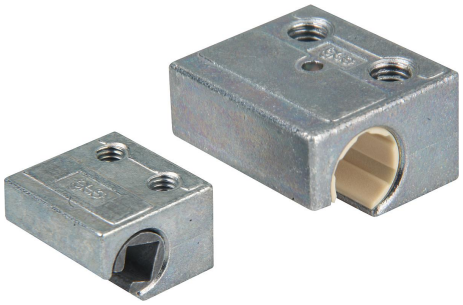

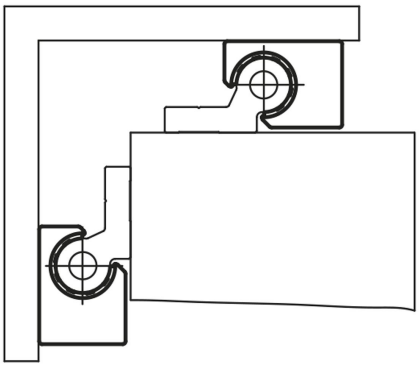

Description

Material:
Die-cast zinc.

Bearing material iglidur® J.

Version:
trivalent passivated.

Note:
DryLin® W slide carriages are maintenance-free and corrosion resistant. Lacking the need of lubrication makes the system highly dirt resistant. Low friction coefficient in dry running and very quiet. Suitable for single or double rails. Speeds up to 15 m/s. Applicable temperature -40 °C to +90 °C.

Accessory:
Guide rails 21240.

Drawings

size 06

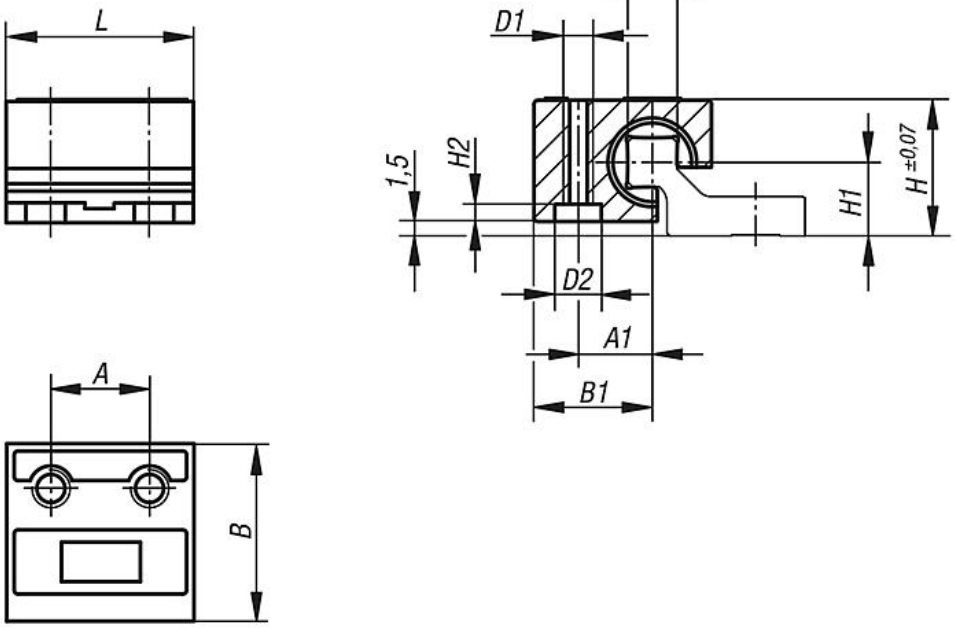

sizes 10-20

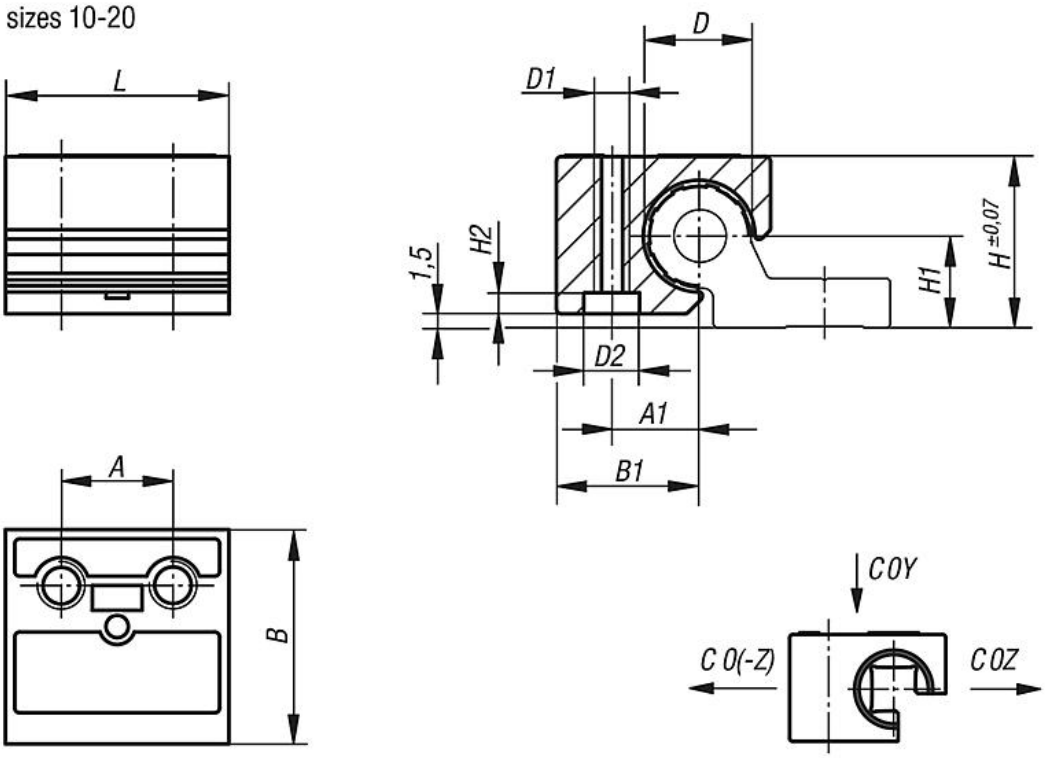

Overview of items

Order No.	Version 2	Size	A	A1	B	B1	D	D1	D2	H	H1	H2	L	C0Y kN	C0Z kN	C0(-Z) kN
21240-0600	standard fixed bearing	6	10	7,5	18	12	5	M4	7	14	7,5	2	19	0,42	0,42	0,14

Overview of items

Order No.	Version 2	Size	A	A1	B	B1	D	D1	D2	H	H1	H2	L	C0Y kN	C0Z kN	C0(-Z) kN
21240-0620	floating bearing y axis	6	10	7,5	18	12	5	M4	7	14	7,5	2	19	0,42	0,42	0,14
21240-0630	floating bearing z axis	6	10	7,5	18	12	5	M4	7	14	7,5	2	19	0,42	0,42	0,14
21240-1000	standard fixed bearing	10	16	10	26	16,5	10	M6	9,5	18	9	3,5	29	1,2	1,2	0,25
21240-1020	floating bearing	10	16	10	26	16,5	10	M6	9,5	18	9	3,5	29	1,2	1,2	0,25
21240-1600	standard fixed bearing	16	18	14	34,5	23	16	M8	11,5	27	14	4	36	2,1	2,1	0,4
21240-2000	standard fixed bearing	20	27	17	42,5	26	20	M8	11,5	36	20	4	45	3,2	3,2	0,5
21240-2020	floating bearing	20	27	17	42,5	26	20	M8	11,5	36	20	4	45	3,2	3,2	0,5