Item description/product images

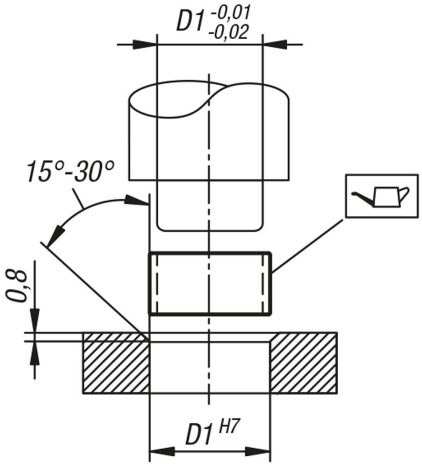

Description

Material:
Sintered bronze similar to SINT A50.

Version:
Oil impregnated (ca. 25 percent by volume oil).
Hardness min. 25 HB.

Note:
The sintered bronze plain bearings are oil impregnated, self-lubricating, maintenance-free and ready for installation. During rotation the oil is applied to the shaft and absorbed by the bearing through capillary effect when stationary. Additional lubrication is not required under normal operating conditions.

Technical data:
Static load: max. 70 N/mm²
Dynamic load: max. 20 N/mm²
Friction coefficient, dry: 0.05 to 0.10
Sliding speed: max. 6 m/s
Maximum pv value: 2,45 N/mm² * m/s
Temperature range: -20 °C to +100 °C

Assembly:
Press in plain bearings, do not hammer in. The use of a suitable press mandrel is advisable. Without a mandrel there is a risk that the bearing may deform during installation. After press-fitting into a housing with bore H7 the bore D has a H7 tolerance.

Tolerances:
Housing:
Recommended tolerance H7.

Shaft:
Recommended tolerance h6 to h9. Hardened or non-hardened ground shafts can be used (for secondary applications drawn shafts can also be used).

Drawings

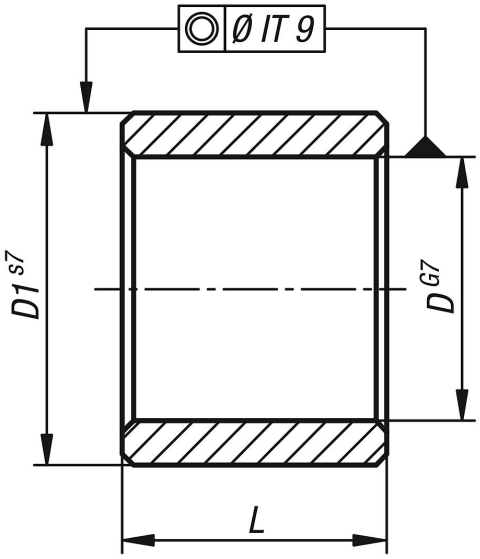

Overview of items

Order No.	D	D1	L
23760-00300604	3	6	4
23760-00300606	3	6	6
23760-00400704	4	7	4
23760-00400804	4	8	4
23760-00500808	5	8	8
23760-00500810	5	8	10
23760-00500816	5	8	16
23760-00600906	6	9	6
23760-00600910	6	9	10
23760-00600912	6	9	12
23760-00600916	6	9	16
23760-00601006	6	10	6
23760-00601010	6	10	10
23760-00601012	6	10	12
23760-00601016	6	10	16
23760-00601206	6	12	6
23760-00801108	8	11	8
23760-00801112	8	11	12
23760-00801208	8	12	8
23760-00801212	8	12	12
23760-00801220	8	12	20
23760-01001310	10	13	10
23760-01001416	10	14	16
23760-01001610	10	16	10
23760-01201512	12	15	12
23760-01201520	12	15	20
23760-01201612	12	16	12
23760-01201812	12	18	12
23760-01201816	12	18	16
23760-01201820	12	18	20
23760-01401822	14	18	22
23760-01402014	14	20	14
23760-01402018	14	20	18
23760-01501920	15	19	20
23760-01502116	15	21	16
23760-01602016	16	20	16
23760-01602020	16	20	20
23760-01602025	16	20	25

Overview of items

Order No.	D	D1	L
23760-01602032	16	20	32
23760-01602216	16	22	16
23760-01602220	16	22	20
23760-01602232	16	22	32
23760-01802218	18	22	18
23760-01802418	18	24	18
23760-01802428	18	24	28
23760-01802518	18	25	18
23760-02002432	20	24	32
23760-02002516	20	25	16
23760-02002520	20	25	20
23760-02002525	20	25	25
23760-02002532	20	25	32
23760-02002620	20	26	20
23760-02002625	20	26	25
23760-02002632	20	26	32
23760-02002825	20	28	25
23760-02202822	22	28	22
23760-02503020	25	30	20
23760-02503025	25	30	25
23760-02503032	25	30	32
23760-02503040	25	30	40
23760-02503220	25	32	20
23760-02503225	25	32	25
23760-02503232	25	32	32
23760-02503240	25	32	40
23760-02803628	28	36	28
23760-03003824	30	38	24
23760-03003830	30	38	30
23760-03003838	30	38	38
23760-03204032	32	40	32
23760-03504428	35	44	28
23760-03504435	35	44	35
23760-03504535	35	45	35
23760-03604536	36	45	36
23760-04004632	40	46	32
23760-04004640	40	46	40
23760-04005025	40	50	25
23760-04005040	40	50	40
23760-04505545	45	55	45
23760-04505645	45	56	45
23760-05005632	50	56	32
23760-05005650	50	56	50
23760-05006032	50	60	32
23760-05006040	50	60	40
23760-05006050	50	60	50