Item description/product images

Description

Material:
Housing thick steel plate.
Wheels welded steel body and Extrathane® tread.

Version:
Pressed housing

Note:
These castors are particularly shock and impact proof. The treads resist abrasion and are elastic and low-noise. Wheel axle bolted.

Drawings

fixed castor

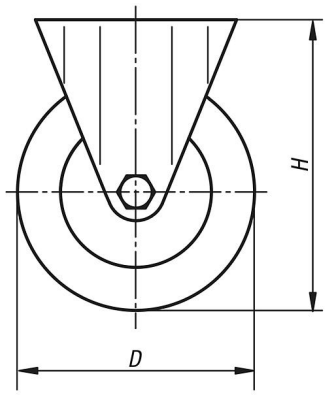

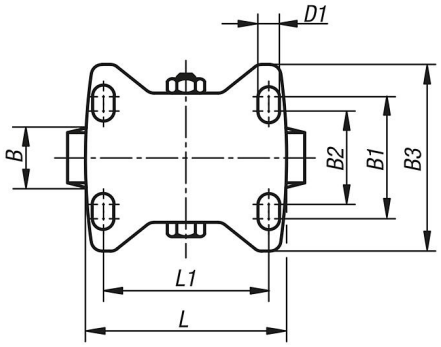

Overview of items

Order No.	Item	Version 1	Wheel bearing	B	B1	B2	B3	D	D1	L	L1	H	Permissible load kg
95030-125501	Fixed castor	without locking system	ball bearing	50	80	75	110	125	11	140	105	170	500
95030-160501	Fixed castor	without locking system	ball bearing	50	80	75	110	160	11	140	105	202	700
95030-200501	Fixed castor	without locking system	ball bearing	50	80	75	110	200	11	140	105	245	900

Overview of items