Item description/product images

Description

Material:
Housing thick steel plate.
Wheels PA 6.

Version:
Housing press formed.
Swivel castor housing with strong fork and base plate, very robust centre pin bolted and secured. The swivel head is additionally reinforced with specially formed and hardened bearing shells.
Plain bearings in the wheels.

Note:
Wheel axle bolted. The wheels are particularly shock and impact proof and have high abrasion resistance.

Drawings

swivel castor

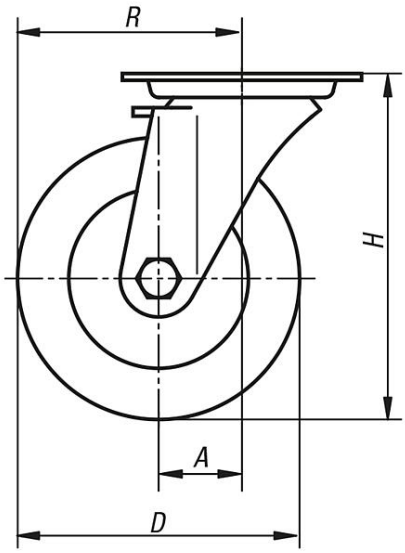

fixed castor

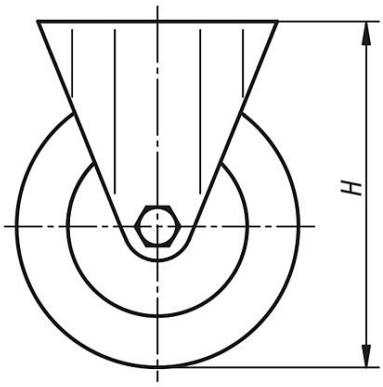

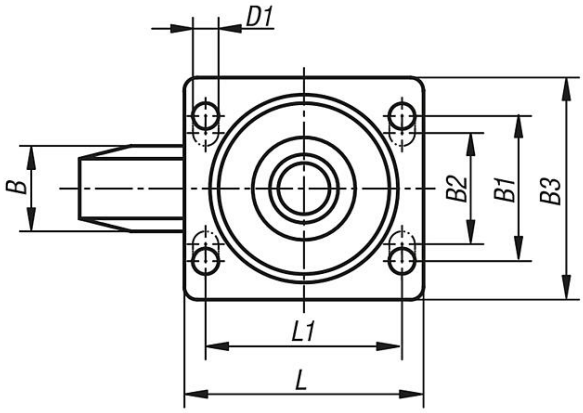

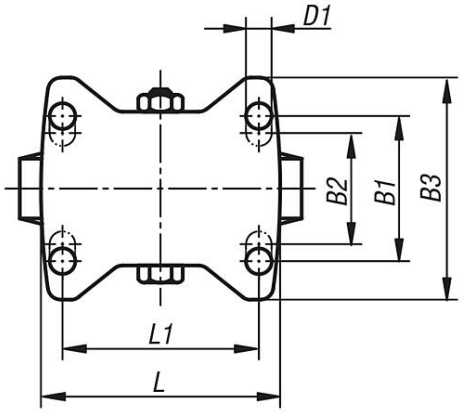

swivel head bearing

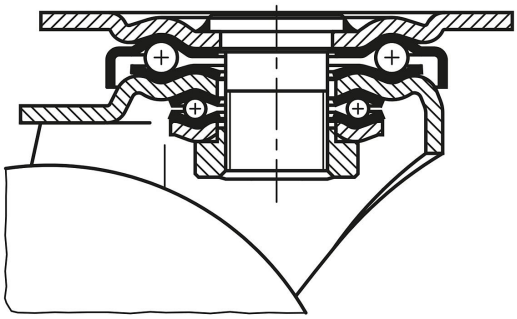

Overview of items

Order No.	Item	Version 1	Wheel bearing	A	B	B1	B2	B3	D	D1	H	L	L1	R	Permissible load kg
95036-100371	Fixed castor	without locking system	plain bearing	-	37	60	-	85	100	9	140	100	80	-	280
95036-125401	Fixed castor	without locking system	plain bearing	-	40	60	-	85	125	9	165	100	80	-	300
95036-150501	Fixed castor	without locking system	plain bearing	-	50	80	75	110	150	11	197	140	105	-	400
95036-200501	Fixed castor	without locking system	plain bearing	-	50	80	75	110	200	11	245	140	105	-	600
95036-10037	Swivel castor	without locking system	plain bearing	45	37	60	-	85	100	9	140	100	80	95	280

Overview of items

Order No.	Item	Version 1	Wheel bearing	A	B	B1	B2	B3	D	D1	H	L	L1	R	Permissible load kg
95036-12540	Swivel castor	without locking system	plain bearing	45	40	60	-	85	125	9	165	100	80	107,5	300
95036-15050	Swivel castor	without locking system	plain bearing	65	50	80	75	110	150	11	197	140	105	140	400
95036-20050	Swivel castor	without locking system	plain bearing	70	50	80	75	110	200	11	245	140	105	170	600
95036-100372	Swivel castor	with stop-top locking system	plain bearing	45	37	60	-	85	100	9	140	100	80	95	280
95036-125402	Swivel castor	with stop-top locking system	plain bearing	45	40	60	-	85	125	9	165	100	80	107,5	300
95036-150502	Swivel castor	with stop-top locking system	plain bearing	65	50	80	75	110	150	11	197	140	105	140	400
95036-200502	Swivel castor	with stop-top locking system	plain bearing	70	50	80	75	110	200	11	245	140	105	170	600