Item description/product images

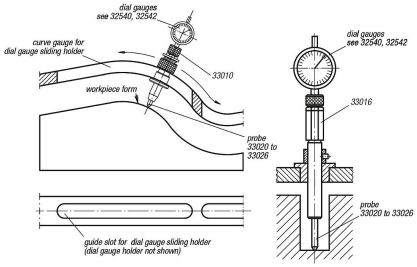

Description

Material:
Carbon steel.

Version:
Black oxidised.
Collet and body tempered.

Note:
Dial gauge and probe are not included.
Dial gauges see 32540 and 32542.
Probes see 33020 up to 33026.

Drawings

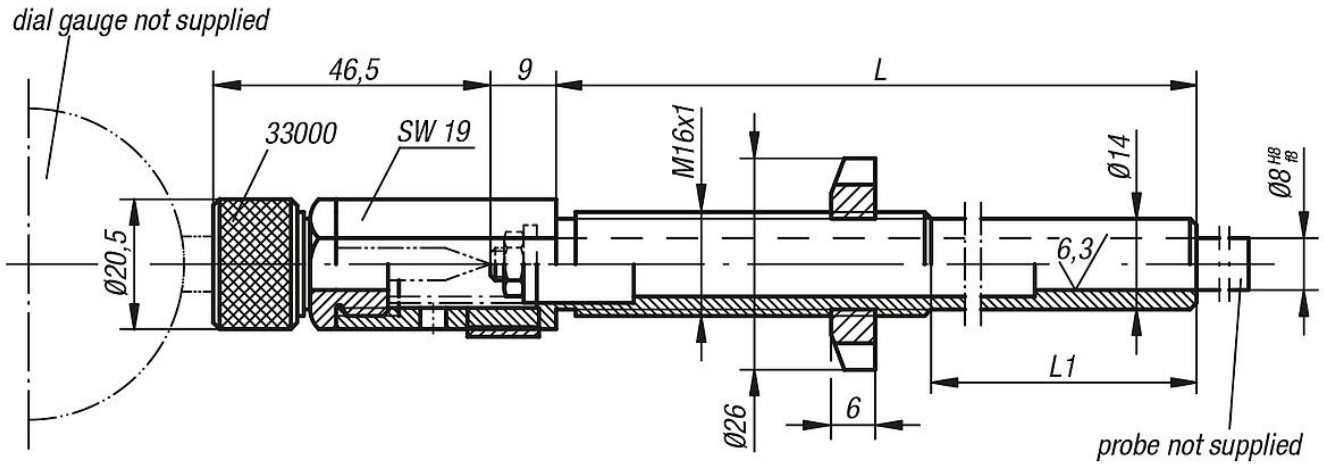

Overview of items

Order No.	L	L1	Supplied for the probe pin
33014-08125	125	75	1 washer 5.3 x 14 x 11 hex nut M51 spring
33014-08180	180	130	1 washer 5.3 x 14 x 11 hex nut M51 spring