Item description/product images

Description

Material:
Housing aluminium.
Measuring spindle stainless steel.

Version:
Measuring spindle hardened and ground.

Note:
Display rotatable by 280°
Standard holding shank Ø 8h6
Exchangeable probe
Thread M2.5
Protection class IP42

Function:
– Optional measuring system mm/inch
– PRESET

Electronics can be switched off.
6 digit LCD display.
Extra large digits.
Digit height 8.5 mm.
Max. traverse speed 1.5 m/s.
Data interface: Digimatic, Opto RS-232C, USB factory standard.
Battery life ca. 2000 hours.
Supplied with type CR2032 battery.

Accessory:
Spare CR2032 battery
order No. 32510-20.

Drawings

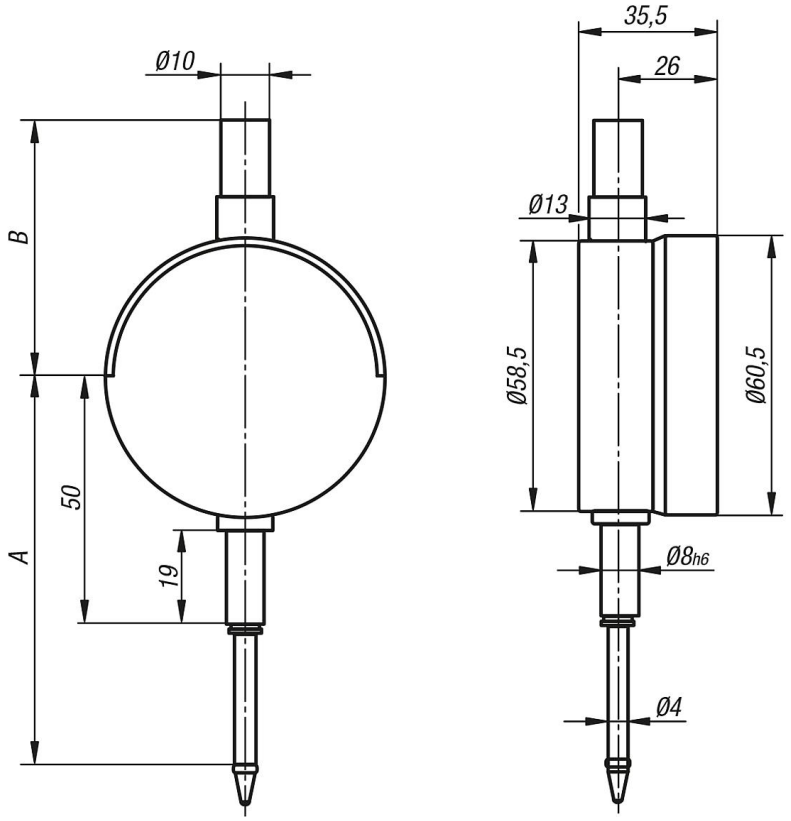

Overview of items

Order No.	Version	Type	A	B	Measuring range mm	Resolution mm	Precision mm	Repeat precision µm	Probe force N
32542-01	dial gauge	Preset	78,4	53,4	25	0,001	0,005	2 (±2s)	0,6 - 1,10
32542-02	dial gauge	Preset	78,4	53,4	25	0,01	0,010	2 (±2s)	0,6 - 1,10
32542-03	dial gauge	Preset	65,9	53,4	12,5	0,001	0,005	2 (±2s)	0,7 - 0,95
32542-04	dial gauge	Preset	65,9	53,4	12,5	0,01	0,010	2 (±2s)	0,65 - 0,9
32542-012	dial gauge with calibration certificate	Preset	78,4	53,4	25	0,001	0,005	2 (±2s)	0,6 - 1,10
32542-022	dial gauge with calibration certificate	Preset	78,4	53,4	25	0,01	0,010	2 (±2s)	0,6 - 1,10
32542-032	dial gauge with calibration certificate	Preset	65,9	53,4	12,5	0,001	0,005	2 (±2s)	0,7 - 0,95
32542-042	dial gauge with calibration certificate	Preset	65,9	53,4	12,5	0,01	0,010	2 (±2s)	0,65 - 0,9